AIR HOIST

EHL-1TS
EHL-2TW

INSTRUCTION MANUAL

This is copied digital data
http://www.endo-kogyo.co.jp/

WARNING

- Never use the hoist for lifting or lowering people.
- Supply this manual to the user.
- Read this manual before installation, operation, or maintenance.
- Keep this manual available.

ENDO KOGYO CO., LTD.

HM-10135

ENDO

Issued on Feb. 2016

Copyright and liabilities

The copyright for this manual belongs to Endo Kogyo Co., Ltd.
The manual is provided for the limited purpose of supporting the safe and proper use of the product. It cannot be used for other purposes.
The customer may not use or make copies of this manual, in whole or in part, outside of this purpose without receiving prior consent from Endo Kogyo Co., Ltd.
The customer is also prohibited from translating or modifying the content of the manual, in whole or in part.
The content described in the manual is subject to change without advance notice.
Please note this in advance.

November 2019 ENDO KOGYO CO., LTD.

Collected data from http://www.endo-kogyo.co.jp/

SAFETY ALERT SYMBOL AND ALERT SIGNS

Please read this manual carefully and follow its instructions.
The SAFETY ALERT SYMBOL (⚠), WARNING, CAUTION, and NOTE carry special messages.

⚠ This SAFETY ALERT SYMBOL is used to call your attention to items or operations that could be dangerous to you or other persons using this equipment.
Please read these messages and follow these instructions carefully.

⚠ **WARNING :** WARNING indicates a hazardous situation which, if not avoided, could result in death or serious injury.

⚠ **CAUTION :** CAUTION indicates a hazardous situation which, if not avoided, could result in minor or moderate injury, damage or destruction of the equipment and others.

NOTE : NOTE indicates a special instruction in operation or maintenance.

Copied digital data from http://www.kubo-kogyo.co.jp/

Scope of warranty and liabilities for the equipment

1. We will repair or replace the product free of charge if a failure due to manufacturing defects occurs under proper usage during the warranty period. For details, contact us or your dealer.

2. The warranty will be void in the following cases:
   1) Change in ownership.
   2) Repair, adjustment, or modification performed by a party other than the manufacturer, agents, or dealers.

3. The warranty period is one (1) year from the date of purchase except for consumables.

4. Repairs applicable to any of the following shall be charged even during the warranty period:
   1) Failure/damage caused by incorrect use.
   2) Failure/damage caused by use of non-genuine parts.
   3) Failure/damage caused by fire, earthquake, natural disaster, or other unexpected incident.
   4) Incident caused by fall, shock, negligence, or by inadequate storage.
   5) Failure/damage caused by use of parts or other equipment that are not included in this product.
   6) Replacement of consumables.
   7) Usage in violation of dangers or cautions stipulated in this Instruction Manual or the warning labels.
   8) Failure/damage caused by any reason that is not attributable to the manufacturer.

5. Warranty exclusions such as mechanical loss.
   Either during or after the warranty period, mechanical loss, damage to anything other than our product(s), or other duties incurred on you/your customer as a result of the failure of our product(s) are outside the scope of the warranty.

Copied digital data from http://www.endo-kogyo.co.jp/

CONTENTS

I . WARNING – READ THESE INSTRUCTIONS ---------- 1

II . Specifications ---------- 3

III. Checks and cautions before Installation ---------- 3

1. Checks of the Product 3

2. Instructions on Working Conditions 3

IV. Installation ---------- 4

1. Accessories 4

2. Installation 4

3. Before Air Connection 4

V . Checks after Installation and Test Run---------- 5

1. Load chain 5

2. Hoisting operation 6

3. Hoisting and Lowering Limit Switches 6

4. Load test 6

VI. OPERATION – Proper Operation and Caution ---------- 7

VII. Check before Operation – At the beginning of each shift ---------- 10

VIII. Periodic Inspections ---------- 11

IX. Maintenance and Inspection ---------- 11

1. Lubrication 11

2. Inspection 13

3. Storing the Hoist 19

4. Troubleshooting 20

X. Adjustment of Speed and Operating Limit of Control Lever ---------- 21

X I . Replacement of Load Chain ---------- 22

X II . Disassembly and Reassembly ---------- 28

1. Procedures of Disassembly 28

2. Reassembly 31

X III. Parts List ---------- 36

copied digital data from http://www.ando-kogyo.co.jp/

Important

- Before installing or operating the air hoist, carefully read and understand all of the instructions in this manual in order to avoid accidents as a consequence of incorrect handling.
- All of the people who will install, operate or maintain the hoist, should read this manual.
- After reading, keep this manual available for maintenance and inspections.
- Be sure to abide by trade associations', local and national rules and regulations relating to safety.
- Strictly obey the contents described in this manual.

⚠ I. WARNIG – READ THESE INSTRUCTIONS

If the hoist is not used correctly, a serious accident may occur, such as dropping the load or the hoist itself.
Observe the following instructions for safe operation.

- The following safety precautions should be posted in a conspicuous location.

1. General Handling

- Anyone who operates the hoist must know and observe the safety rules and regulations.
- Do not operate the hoist unless the contents of this manual and warnings on the caution plate are completely known.
- Only allow qualified people to operate the hoist.
  Do not operate the hoist without being qualified and familiar with the safety rules, etc.
- Install the hoist properly and carefully.
- Be sure to check the hoist before each shift, and inspect it periodically.

2. Operation and Handling

- Never lift a load greater than the rated capacity of the hoist.
- Never use the hoist for lifting or lowering people, and never stand on a suspended load.
- Never operate the hoist if it is damaged or has a malfunction.
- Never operate the hoist with the load chain in any of the following conditions:
  ① Twisted, kinked or deformed.
  ② When elongation or the reduction of diameter exceeds the service limits.
  ③ Cracked, damaged or corroded.
  ④ Improperly engaged on the chain wheel.
- Never carry loads over people.
- Be certain there are no objects in the way of the load or hook when moving the hoist.
- Always stand clear of the load.
  Never walk under a suspended load, and keep out of its area of projection.
  Never place hands, feet, etc., under or between suspended loads.
- Never leave a load suspended for any extended period.
- Never use the load chain as a sling.
- Never use a load chain as a ground for welding.
  Do not attach a welding electrode to the hoist or sling chain.
- Never use the upper and lower limit switches as a means of stopping the hoist - these are emergency devices only.

- Before each shift, check the hoist for wear or damage.
  Check brakes, load chain, limit switches, etc.
- Stretched, worn or damaged hooks should be discarded.
  Do not attempt to repair it, just replace it with the new hook.
  Do not use the hook with a damaged or malfunctioning hook latch.
- Be sure that all slings are correctly positioned on, or attached to the load hook.
- Never splice the hoist chain by inserting a bolt between links or by any other means.
- Do not force a load chain or hook into place by hammering, and never insert the point of the hook into a chain link.
- Always operate the hoist carefully during lifting and lowering operations.
  Do not start suddenly, do not stop suddenly, and do not reverse the hoist suddenly.
- Never lock the pull rope or the push button switches.
  The hoist must be operated by the operator himself/herself at all times.
- Never operate the hoist when the load block is not centered under the hoist.
  Do not pull the load at an angle. Move the hoist over the loads' center of gravity before lifting the load.
- Ease the slack out of the load chain when starting to lift.
  Do not jerk the hoist. Carefully take up the slackened load chain.
- Always keep the load chain clean and well lubricated.
  Do not drag the load chain or hook on the floor.
- Be careful the suspended load does not touch the nearby structure or power lines, etc.
- Be careful the hoist or trolley does not collide with the I-beam stopper or the structure.
- Do not swing the load or load block when moving the hoist.
- When moving a load with the trolley, do not push the load chain but push the load itself.
  Do not pull the load.
- Pay attention to the load at all times when operating the hoist.
- Keep the load block overhead when not in use.
- Do not operate the hoist if you are not physically fit to do so.
  The operator must have good hearing, vision and depth perception.
- Do not lift any single load with 2 or more hoists.
- Properly secure an outdoor hoist before leaving it unattended.
- Be sure to protect the hoist from rain and water.

3. Maintenance and Alterations

- Never alter the hoist or its accessories.
- Be sure to shut off the air supply before performing any maintenance work on the hoist.
- Periodically, inspect the hoist thoroughly and replace worn or damaged parts.
- Always employ qualified or well trained personnel for inspection and maintenance.
- Only use genuine parts.
- Follow the lubrication instructions.
- Never operate the hoist without lubricator and filter.
- The air pressure must never exceed 0.6 MPa {6 kgf/cm^2} .
- Do not do anything if you have any questions about the hoist, please do not hesitate to contact the dealer from whom you purchased the hoist, or the nearest dealer shop.

Ⅱ. Specifications

Model	Rated load t	Standard lift m	Air pressure MPa {kgf/cm²}	Lifting speed m/min	Air consumption m³/min {normal}	Chain size × falls	Mass of chain kg/m	Air inlet Rp	Hose size mm {in}	Mass (with standard lift, rope control) kg
EHL-1TS	1	3	0.4{4} 0.5{5} 0.6{6}	4.0 5.2 6.0	1.0 1.4 1.8	7.1×1	1.1	1/2	12.5 {1/2}	34
EHL-2TW	2	3	0.4{4} 0.5{5} 0.6{6}	2.0 2.6 3.0	1.0 1.4 1.8	7.1×2	1.1	1/2	12.5 {1/2}	42

Working conditions

Application area : Indoor and normal atmospheric conditions

Temperature range : -10℃ to +50℃

Ⅲ. Checks and Cautions before Installation

1. Checks of the Product

- Check the delivered hoist is what you ordered (check the name plate).
- Check there was no damage to the hoist during transportation.
- Check the pressure of the available air supply corresponds to the working air pressure of the hoist.

2.Instructions on Working Conditions

⚠ WARNING

- Never use the hoist at a temperature below -10℃ or + above 50℃.

⚠ CAUTION

- Do not install and leave the hoist outdoors.
  If it is necessary to use the hoist outdoors, be sure to make a shelter with a roof for housing the hoist.
- Under hostile environments such as high temperatures, high humidity, acidic, corrosive and/or extremely dusty atmospheric conditions, the mechanical parts of the hoist may be seriously damaged (for example, corroded).
  Therefore, frequently check the hoist is maintained in normal conditions at all times.

Copied digital data from http://www.sanko-kogyo.co.jp/

Ⅳ. Installation

1. Accessories

■ In case of using Control handle (Pull rope):
Referring to Fig. 1, attach Control handle to Control lever by using Control chain and S hook.
Clamp S hook to prevent it disengaging from Control chain.

■ In case of using special accessories:
Before installing the hoist, special accessories, such as Pendant control switch or Overload protector, should be attached to the hoist according to the Instruction Manual.

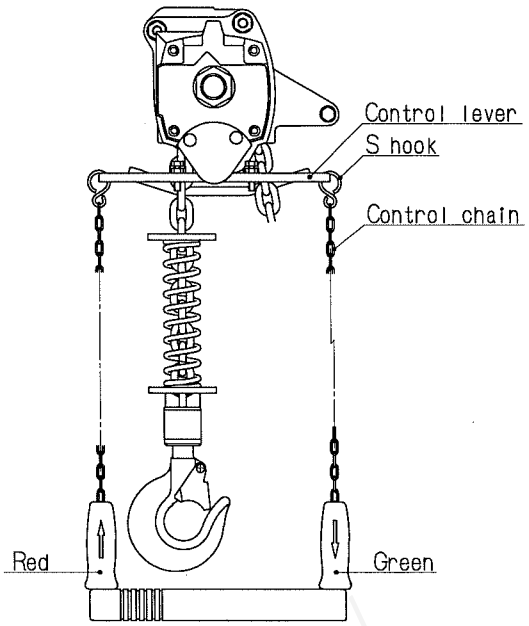

Fig.1

2. Installation

⚠ WARNING

- **Make certain the hoist is properly installed.**
  Otherwise, it could result in dropping the hoist and personal injury or death.
- **Always make certain the supporting member from which the hoist is suspended is strong enough to support the weight of the hoist plus the weight of the maximum rated load, etc.**

- Check Hook is correctly rigged onto the supporting member and Hook latch is correctly closed.
- Never suspend the hoist as an I-beam flanges.
- Do not use a supporting member that suspends the hoist at an angle.
  Otherwise, it could result in dropping the hoist and personal injury or death.
- Do not install hook to edged supporting member. The hook is easily worn and degraded.

3. Before Air Connection

- Check sufficient air can be supplied to the operating area of the hoist.
  Compare the air supply from the compressor to the air consumption of the hoist (See Chapter Ⅱ "Specifications").
  For a pipe of excessively small diameter or of great length, the pressure drop can become large enough to prevent the specified performance.
- Use an air hose whose inside diameter is at least 12.5 mm (1/2 in.).
- Before connecting the air hose or pipe to the hoist, be sure to flush out or blow out with air to prevent the invasion of foreign matter (dust, etc.) into Air motor.
- Compressed air supplied to the hoist should be free from moisture or foreign matter.
  Install an air filter to eliminate them from air supply.
- The hoist is designed to operate within a working pressure range of 0.4 ~ 0.6 MPa { 4 ~ 6 kgf/cm^2 }.
  Keep the working pressure no greater than 0.6 MPa.
  If necessary, use an air regulator for reducing air pressure.

- Install a lubricator to feed lubricant to Air motor.
  See Chapter Ⅸ "1. Lubrication".
  (Do not operate the hoist without lubricant.)
- Connect the air filter, regulator and lubricator as close to the hoist as possible.
- When the air hose is connected to the hoist, pour about 10 drops of lubricant into the connecting port of the hoist.
  (See Chapter Ⅸ "1.(6) Recommended Lubricants".)
- Install a dump valve (drain valve) at the lowest point in the piping.

Ⅴ. Checks after Installation and Test Run

1. Load Chain

- In case of more than one chain fall, Bottom hook may sometimes be rotated between two chain falls.
  This causes Load chain to be twisted (See Fig. 2).
  Before operation, check for and correct any twisting of Load chain.

⚠ WARNING

Using the hoist when the Load chain is twisted could result in damage to the hoist or failure of the Load chain, causing personal injury or death.
Be sure the Load chain is in the correct position.

Copied digital data from http://www.endo-kogyo.co.jp/

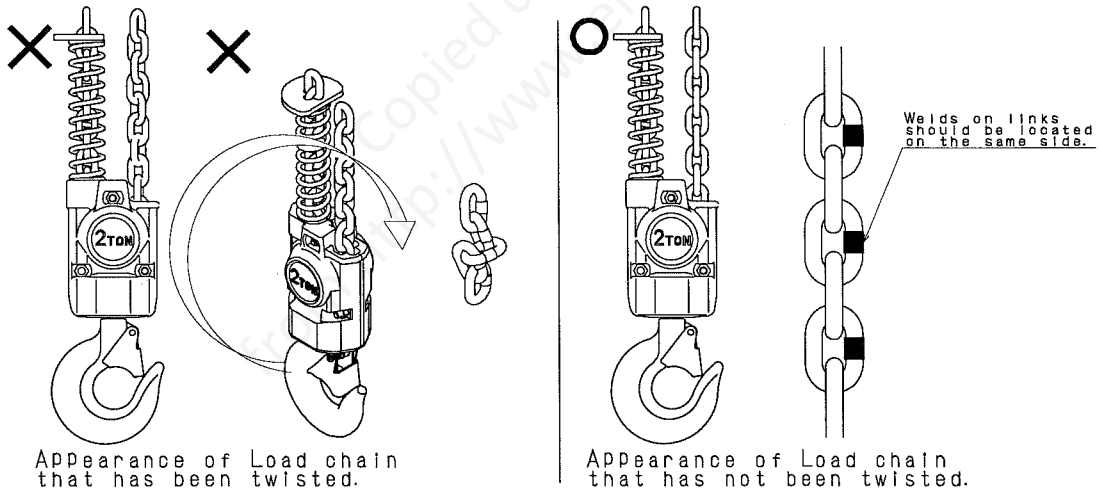

Fig.2

- Check the welds on Load chain are faced away from the center of Chain wheel (See Fig. 3).

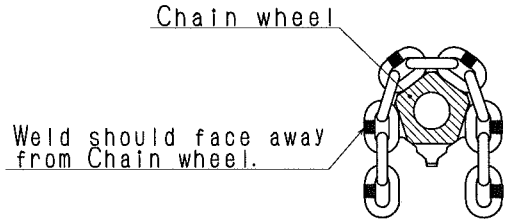

Fig. 3

2. Hoisting Operation

At the initial operation, repeat up/down operations several times at low speed, then go to the full-speed operation. Adjust the speed by controlling the pulling force on Pull rope (for Pendant control switch, adjust the pushing force on buttons).
At this point, check the lubricator is feeding lubricant to Air motor.
(See Chapter Ⅸ "1. Lubrication".)

■ Pull Rope Type

Pull down Red grip (marked ↑) of Control handle. If Hook goes down, Control chain is incorrectly attached to Control lever, hence Control chain must be attached to the other side of Control lever, and checked for correct operation again.

■ Pendant Control Type

Push the button ↑ on the push button switch panel.
If Hook goes down, the hose is incorrectly connected to the cylinder.
Reverse the connection to the cylinder, and check for correct operation.

3. Hoisting and Lowering Limit Switches

After checking Control handle or Pendant control for correct operation, slowly lift Load hook (Bottom hook) to the upper limit.
At this point, Control lever is pushed up by Load hook so that the hoist is stopped automatically.
Next, slowly lower Load hook to the lower limit.
Control lever is lifted up by Load chain so that the hoist is stopped automatically.
Ensure these operations are carefully carried out (See Fig. 4).

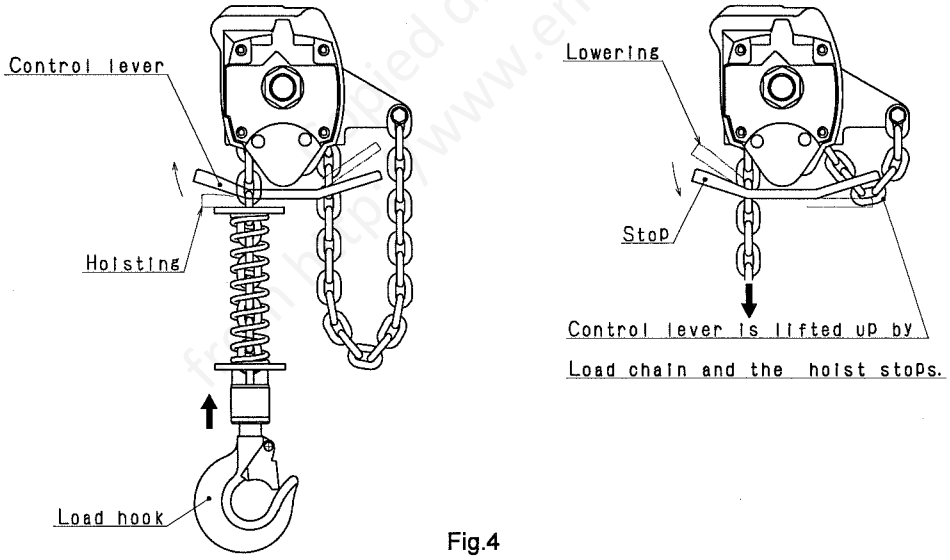

Fig.4

4. Load Test

- Lift the rated load a few inches off the floor and check ability of braking system to stop and hold the load without excessive drift.
- In case of using the hoist with the trolley, traverse the trolley over the entire length of I-beam with the rated load suspended a few inches off the floor.
  Check the condition of I-beam and the length of the air hose.
- Lift 125 % of the rated load and check the operation.
  This test should be performed for the safety check concerning the hoist, I-beam, etc.

VI. OPERAION - Proper Operation and Caution

⚠ CAUTION: Only allow qualified people to operate the hoist.

1. Never exceed the rated load of the hoist.

- Never lift a load greater than the rated load.

＊Otherwise, the hoist may be damaged or the suspended load may drop, causing serious danger.

2. Before operating the hoist, check the condition of Load chain.

See Chapter Ⅴ "1. Load Chain" and

Chapter Ⅸ "2.(2) Inspection of Load Chain and Service Limit".

- Never operate the hoist if Load chain is twisted, kinked, damaged or worn.

＊Otherwise, the hoist may be damaged or the suspended load may drop, causing serious danger.

- Do not operate the hoist if Load chain is stained or unlubricated.

＊Otherwise, Load chain will wear out, making the hoist operation dangerous.

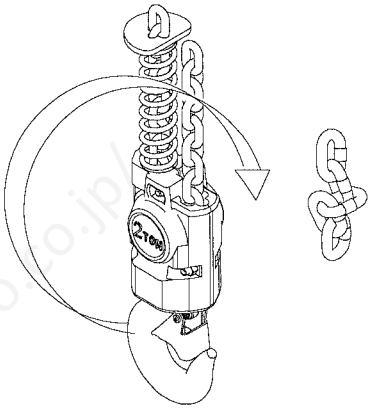

Never twist !

3. Properly hang the slings (suspension fastenings).

Position the slings at the center of the Load hook saddle.

- Incorrect positioning of the slings can cause the load to drop. Always hang the sling securely to avoid slipping.
- Never use Load chain as a sling.

＊Otherwise, Hook and Load chain may be damaged or the suspended load may drop, causing serious danger.

- Discard Hook if stretched or damaged. Do not attempt to repair it, just replace it with a new Hook. When Hook latch is damaged or malfunctioning, do not use.

＊Otherwise, the sling may slip from Hook or the suspended load may drop.

- Use the appropriate sling according to the weight and shape of the load.

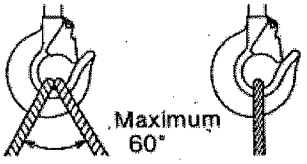

Correct use

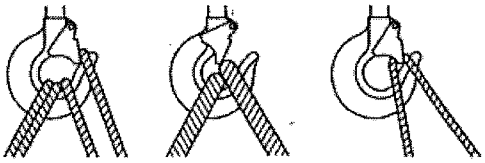

Incorrect use

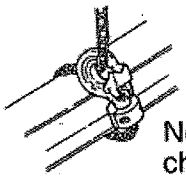

Never use Load chain as a sling !

Copied digital data from http://www.endo-kogyo.co.jp/

4. Move the hoist over the loads' center of gravity before lifting.

- Do not pull a load at an angle.

＊Otherwise, the load may slip on the floor or swing when lifted, causing serious danger.
In addition, the hoist may possibly be damaged.

5. When starting to lift, stop hoist once as Load chain becomes tensioned.

Carefully take up the slackened Load chain.
Thereby, lift-off shock can be reduced, while preventing the hoist from damage.

- Stop once and check the condition of the sling.
- Check the balance of the load by slightly moving or lifting the load.

6. Carefully lift and lower the load without swinging.

- Do not lift or lower with the load swinging.
  Even if there is no load, do not swing Load hook.

＊Otherwise, Load chain may be damaged due to the irregular winding or the suspended load may drop.

- Be careful Load hook or the suspended load does not touch the structure, etc.

＊Otherwise, the hoist may be damaged or the suspended load may drop due to abnormal shock.

7. Stop lifting or lowering before Upper or Lower limit switches are activated.

- Never use Upper and Lower limit switches as a means of stopping hoist.

＊Otherwise, Control lever may become worn or deformed, causing failure in an emergency.

8. Employ 1 hoist for hoisting and lowering.

- Do not lift any single load with 2 or more hoists.

＊The air hoist is different from the electric hoist, hoisting speed varies depending on the weight of the load, pressure or flow rate of supplied air, etc.
Therefore, 2 hoists can not be operated at the same speed.
When this is done, a dangerous situation will occur, as the load is applied to only one hoist, creating overloading.

9. Carefully traverse the trolley to prevent the load from swinging.

- When moving the load with the trolley, do not push Load chain but push the load itself.
  Do not pull the load.
- Do not pull the trolley by pulling Control chain (Pull rope type) or Control tube (Pendant control type).

＊Otherwise, an operating mistake may occur and the chain or the tube may be damaged.

- When traversing the trolley, be careful that the trolley does not collide with the I-beam stopper.

＊Otherwise, excessive shock may cause the suspended load to drop or the hoist to be damaged.

10. Correctly operate the hoist.

- Do not reverse the hoist suddenly.
  When reversing, stop lifting or lowering once.
  Do not start suddenly, do not stop suddenly.

＊Otherwise, shock may occur and the hoist may be damaged.

- Smooth operation for lifting and lowering is very important.
- Never lock Pull rope or the push button switches.

＊Otherwise, the hoist can not be operated in an emergency, causing serious danger.

- After operation, do not let go of Pull rope or the push button switch panel until it has been centered below the hoist.

＊Otherwise, the Pull rope or panel may swing and hit something, causing an operating mistake or damage.

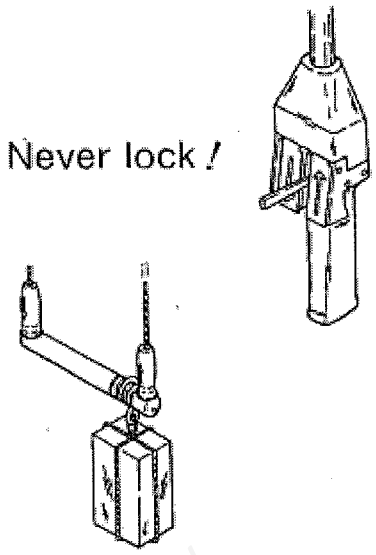

11. Be sure to unload all loads on the floor.

- Never leave a load suspended.

＊This is a serious hazard for any person near the suspended load.

12. Carefully choose a safe position for operation and check the surroundings.

- Never walk under a suspended load or in the traveling area of the load.

＊Serious danger if the load drops.

- Never stand on a suspended load.

＊The suspended load is very unstable, causing a person or the load to drop.

- Never carry a load over people.

＊Serious danger if the load drops.

- Before operating the hoist, be sure to check that no one is in the travelling area of the load.

Scanned digital data from http://www.enon-kogyo.co.jp/

Ⅶ. Checks before Operation (At the beginning of each shift)

Be sure to execute the following checks at the beginning of each shift.

If there is anything unusual noticed, do not use the hoist until the problem has been corrected.

Never operate the hoist if damaged or malfunctioning.

At least the following items should be checked:

1. Check before Start up

(1) Check Load chain is not twisted, kinked, damaged, or worn.

Wear or damage on the chain can not be detected by casual or formal observation.

See Chapter Ⅴ "1. Load Chain" and Chapter Ⅸ "2.(2) Inspection of Load Chain and Service Limit".

(2) Keep Load chain clean and well lubricated.

(3) Check Load hook is not stretched or damaged and Hook latch is in the normal position.

(4) Check Chain wheel in Hook block rotates smoothly (See Fig. 5).

(5) Check the support bearing of Load hook is not damaged, and swivels easily and smoothly.

(6) Check the trolley wheels track the rails properly and the wheels and rails are not worn.

(7) Check the lifting sling (suspension fastening) is not damaged or worn.

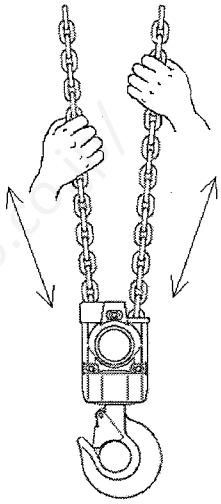

Fig.5

2. Check by Idling Operation

(1) Check Pull rope or the push button switches can be easily operated and the up/down operations are correct as indicated.

・Check hoisting speed can be changed from low to high speed by controlling the pulling force on Pull rope or the pushing force on the push button switches.

(2) Check Load chain flows freely and smoothly into and out of the Chain wheel and there is no noise indicative of binding or other malfunctions.

(3) Check Upper and Lower limit switches function correctly.

See Chapter Ⅴ "3. Hoisting and Lowering Limit Switches".

(4) Check the hoist is not abnormally noisy or vibrating.

3. Check by Load Operation

(1) Lift the rated or near the rated load a few inches off the floor and check ability of braking system to stop and hold the load without excessive drift.

(2) Check Load chain flows freely and smoothly into and out of the Chain wheel and there is no audible clicking or other evidence of binding or malfunction.

(3) Check the hoist is not abnormally noisy or vibrating.

Copied digital data from http://www.endo-kogyo.co.jp/

Ⅷ. Periodic Inspections

Be sure to periodically inspect the hoist for safe operation.

- **Before inspection, shut off the air supply completely.**
- Preparing a special table for inspection is recommended.

■ **Monthly Inspection**

Inspect the hoist at least once a month.
Correct and repair any problems which are detected.

- Required interval for inspection depends on the operating environment, operating frequency, and loading conditions of the hoist.
  Therefore, make the inspection interval shorter according to your operating condition.
- For inspection items and methods, **see Chapter Ⅸ "2. Inspection" .**

■ **Annual Inspection - Disassembly is required**

Completely disassemble the hoist at least once a year for inspection and maintenance.
Correct and repair any problems which are detected.

- Inspect the hoist yearly or every 1000 hours of operation, whichever is shorter.
  If daily operation time exceeds 5 hours, inspect the hoist every 6 months.
  However, the required interval for inspection also depends on the operating environment and loading conditions of the hoist.
  Therefore, make the inspection interval shorter according to your operating condition.
- For inspection items and methods, **see Chapter Ⅸ "2. Inspection".**

■ **Service Limit of Parts**

If any part is found to be worn beyond its service limit in the monthly, annual, or other inspections, never reuse it.

Ⅸ. Maintenance and Inspection

1. Lubrication

(1) Air motor

- To prevent Air motor from dry operation, continuously lubricate using a lubricator.
- Adjust the frequency and volume of lubrication at the lubricator so that one drop of lubricant might fall off from the nozzle when the hoist works with no load at one meter lift 3 times.
- Periodically check the oil level in the lubricator, and replenish if necessary.
  Do not allow the oil level to go below the indicated line.
- Periodically remove drain water deposited in the air filter bowl.

(2) Reduction Gear

- The reduction gear has been greased before shipment.
- Replace grease in the reduction gear when the hoist is disassembled for maintenance or inspection.
  Daily lubrication is not required.
- Required quantity of grease is 180 cm^3 (180 mL).
  Lubricate 60 cm^3 (60 mL) respectively in each gear stage.

Copied digital data from http://www.endo-kogyo.co.jp/

(3) Load Chain

- Always keep Load chain and the chain anchor pin clean and well lubricated.
- Before installation, load test or initial operation, be sure to lubricate Load chain.
  Even if operating with no load, lubricate Load chain.
- Periodically coat Load chain with lubricant to minimize wear on Load chain or Chain wheel.
  Poorly lubricated Load chains will wear out quickly, making the hoist operation dangerous.
- Determine the lubrication interval according to the operating frequency and the loading conditions.
- Before reapplying lubricant, completely clean Load chain.
  Lubricate in the no-load condition.
- Use heavy gear oil, for example, "Shell Omala Oil S2 G 320", etc.

(4) Hook Block, Load Hook

- Each time the hoist is disassembled for inspection, maintenance, or replacement of Load chain, lubricate the support bearing (Steel ball) of Load hook.

(5) Brake Part

- Each time the hoist is disassembled for inspection, maintenance or repair, completely clean the inner mechanism and reapply lubricant.
  For lubricating position, see Chapter Ⅸ "2.(3) Inspection of Brake and Service Limit".
- Use heavy gear oil, for example, "Molykote (R) 33M", etc.

(6) Recommended Lubricants

The following table shows the recommended lubricants.

Always use the same type or equivalents recommended by the oil manufacturer.

Manufacturer	Air motor (Lubricator)	Reduction gear (Incl. bearing of reductiongear)	Other bearing
Exxon Mobil	Mobil DTE Light	Mobilux EP0	Mobilux EP2
COSMO OIL	COSMO NEW MIGHTY SUPER 32	COSMO GREASE DYNAMAX EP No.0	COSMO GREASE DYNAMAX EP No.2
JX Nippon Oil & Energy	FBK OIL RO32	EPNOC GREASE AP (N)0	EPNOC GREASE AP (N)2
Shell	Tellus S2 M32	Alvania EP Grease R0	Alvania EP Grease 2

Copied digital data from http://www.endokogyo.co.jp/

2. Inspection

⚠ CAUTION:

- **Be sure to shut off the air supply before inspection.**
- **Always disassemble the hoist on the floor.**
- **Always use genuine parts for replacement.**
- **Always employ qualified or well trained personnel for inspection and maintenance.**

(1) Inspection of Hook and Service Limit

■ If any of the following conditions apply to the inspected Hook, never reuse, always replace with a new Hook.

Never repair Hook.

- Hook opening is visibly stretched, or opening dimension is different from that specified.
- Hook is deformed or cracked.
  Carefully check for any bends or cracks on the hook shank.
- Wear on the hook saddle, where the lifting sling (suspension fastening) rests, exceeds the service limit.
- Hook latch is damaged or malfunctioning.

■ Major Dimensions of Hook and Wear Limit

For hook opening dimensions A and B, measure Hook before use as a reference for later inspections.

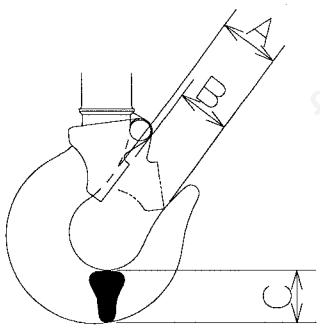

(mm)

Model		Standard dimension		C	
		A	B	Standard dimension	Service limit
EHL-1TS	Top hook	35.5	33	36.5	34.0
	Bottom hook	31.5	29	31.0	28.6
EHL-2TW	Top hook	35.5	33	36.5	34.0
	Bottom hook	35.5	33	36.5	34.0

Copied digital data from http://www.endo-kogyo.co.jp/

(2) Inspection of Load Chain and Service Limit

Clean Load chain using solvent so any damage can be located.
The inspection should be carried out on each link of Load chain.
Never use acidic solvents.

■ Never use Load chain having any one of the following defects.
Replace it with a new Load chain.
Never repair Load chain.

- Flaws or cracks.
  In particular, carefully check the weld on the links and end links which are connected to the main body or Load hook (Hook holder).
- Deformed or corroded.
- Stretch exceeding the service limit.
- Reduction of diameter exceeding the service limit.

■ Limit of Stretch and Wear

For dimensions P and d, measure the entire working length of Load chain.
Pay special attention to the links which engage Chain wheel when the load is at the upper or lower limit.
If the hoist is always used for the same lifting distance, wear on these links will be about two to four times that of other links.
For dimension P, measure the length of 5 links while tensing Load chain as shown in the figure below.

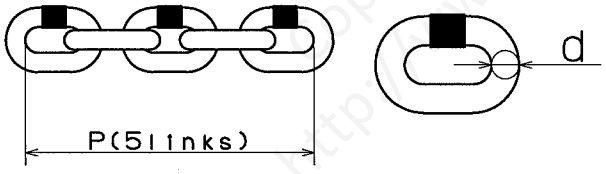

(mm)

	Standard dimension	Service Limit
d	7.1	6.7
P	106.0	108.0

- When any number of links in the working length reaches or exceeds the service limit, replace the entire chain.

■ Replacement Parts and Maintenance after Inspection

- Never use a new Load chain with a worn Chain wheel.
  Replace Load chain and Chain wheel at the same time.
- See Chapter XI "Replacement of Load Chain".
- **Always use a manufacturer's genuine replacement chain.**
  Never use any other chain.
- Always coat Load chain with lubricant after inspection or upon replacement.
  See Chapter IX "1. Lubrication".

Copied digital data from http://www.endo-kogyo.co.jp/

(3) Inspection of Brake and Service Limit

Disassemble the brake and inspect the lining and component parts.

■ Disassembly of Brake

For details, see Chapter XII "1. Procedures of Disassembly".

a) Loosen Cap screws(16) sequentially by 1/6 turns, and remove Brake cover(60).

b) Check grease from the reduction gear has not leaked through Oil seal (42) when removing Brake disc(48) from Brake housing(41).

c) If grease leakage is found, remove Brake housing(41). Loosen cap screws sequentially by 1/6 turns.

d) Clean each part.

NOTE:

- Never use solvent when cleaning Oil seal(42), X-rings(53),(56) or O-rings(23),(40),(54).
- If oil adheres to the lining, wipe off with a cloth wetted with solvent.
- Be careful to prevent solvent or foreign matter entering the air circuit of the brake.

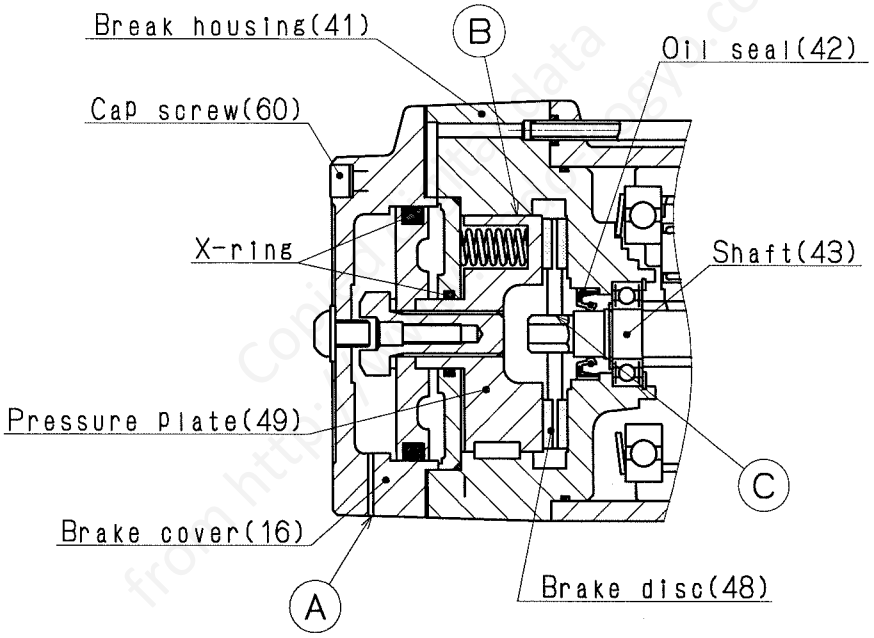

■ Inspections should be performed on all parts, checking cracks, flaws, deformation and wear. In particular, check the following items:

- Does wear on the lining exceed the service limit?
- Is Spring(51) decayed, cracked or flawed?
- Are there any pressed marks or cracks at engaged part Ⓒ between Brake disc(48) and Shaft(43)?
- Is air exhaust hole Ⓐ on Brake cover(60) open?
- Are there flaws, deformation or wear on Oil seal(42) or X-rings(53),(56)? Are there any flaws on the shaft surface where Oil seal(42) rests?

■ Wearing Limit of Lining

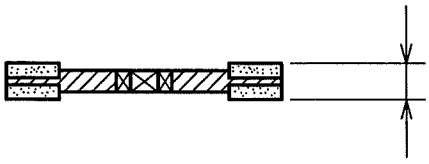

(mm)

Standard dimension	Service Limit
7.5	5.5

■ Solution

- Replace cracked, flawed, deformed or worn parts.
- Replace Oil seal(42), if grease has leaked from the reduction gear.
  Wipe up any grease adhering to the lining, etc., by using a cloth wetted with solvent.
  If Shaft(43) is worn or flawed, replace it with a new one.
- Replace Brake disc(48) if wear on the lining exceeds the service limit.
  Even if wear is close to the service limit but not exceeding, replacement is recommended.
- Replace Springs(51) at the same time as Brake disc(48).
- Replace all Springs(51) at the same time.

■ Assembly

- See Chapter Ⅻ "2. Reassembly" for assembling procedure.
- Apply " Molykote (R) 33M" to the sliding surface of X-rings(53),(56), sliding surface Ⓑ of Pressure plate(49) and Brake housing(41), and engaged part Ⓒ between Brake disc(48) and Shaft(43) before assembly. (See Chapter Ⅸ "1. Lubrication").
- Thinly coat the sliding surface Ⓑ of Pressure plate(49) and engaged part Ⓒ of Shaft(43) with grease.
- The brake is a self-adjust system.
  Therefore adjustment is not required.

(4) Inspection of Chain Wheel

- Are there any visible indents from Load chain on the pocket of Chain wheel?
- Is there any deformation, or cracks?
  Carefully check the filleted and connected sections of the shaft.
- Are Bearings damaged or worn?
  Those which do not rotate smoothly (feels rugged when manually rotated) are beyond their service limit.
- Replace Chain wheel at the same time as Load chain.

(5) Inspection of Hook Holder and Hook Block

■ EHL-1TS

- Is there any deformation, cracks, or indents on Hook holder?
  Carefully check the part where Load chain is attached.
  Is there any wear or indents on the raceway surface of Steel ball?
- Are there any pressed marks, deformation, flaws, cracks, or corrosion on the chain anchor pin?
- Is Ring deformed?
  Is there any play when Ring is fitted in the groove?
- Are there any cracks on Steel balls?

■ EHL-2TW

- Is there any deformation or cracks on Hook case?
  Carefully check the part where Hook holder is attached.
- Are there any cracks on Hook rings?
- Are Bearings damaged or worn?
  Those which do not rotate smoothly (feels rugged when manually rotated) are beyond their service limit?
- Are Bolts loose?

(6) Inspection of Buffer Spring and plate

- Spring are deformed, cracked, worn.
- The spring get hung up on Load chain.
- The Spring length is shrunk beyond the service limit or is narrower than the standard dimension.
- Is plate deformed or cracked?

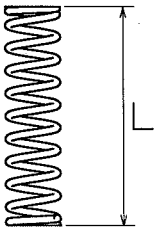

(mm)

Model	Standard dimension	Service limit
EHL-1TS・EHL-2TW	150	145

(7) Inspection of Casing (Main body Case・Gear housing・Motor housing)

- Are there any flaws, cracks, or deformation?
  Carefully check the part where Top hook and Chain anchor pin is attached.
- Are there any pressed marks, deformation, flaws, cracks or corrosion on the chain anchor pin?
  Is Split pin in place?
- Has Bolt, which fixes the dead end of Load chain (end link on the non-loading side), dropped or is it loose?
- Are Bolts loose?

(8) Inspection of Switches

■Pull Rope Type

- Is Pull rope (Control chain) twisted or broken?
- Does Pull rope correctly return to the neutral position after being pulled down?.

■Pendant Control Type

- Is Control tube damaged, or is the connection part loose?
- Is Protection tube broken or bent?
- Does the push button correctly return to the neutral position after being pushed?
- Is there any damage to the Switch case?
- Has Retaining ring dropped, or are Bolts loose?

(9) Inspection of Valve (Main Valve)

- Is there any deformation or cracks on Control lever?
- Is the tightening bolt loose?
- Does Control lever quickly return to the neutral position after being pushed up or pulled down?
- Is Cover deformed?

Clogging of Strainer in Adapter at the inlet port may reduce hoist performance.
Therefore, clean Strainer periodically.

Copied digital data from http://www.endo-kogyo.co.jp/

(10) Inspection of Air Motor

■ Replace parts which show the following conditions:

- Vanes are warped (curved), seized or cracked.
  Wear on Vanes exceeds the service limit.
- Side face of Rotor is gouged or seized.
- The vane slot of Rotor is worn beyond the service limit or is narrower than the standard dimension.
- Rotor is cracked, or there is a visible indent or deformation on the contacting surfaces between Rotor and Coupling.
- End plate is gouged or seized, or the surface is rough due to wear.
- Abnormal wear, flaw or corrosion is found on/in Cylinder.
- Bearings are damaged, worn, or do not rotate smoothly (feels rugged when manually rotated).
- Silencer is clogged.

■ Wearing Limit of Vane and Rotor

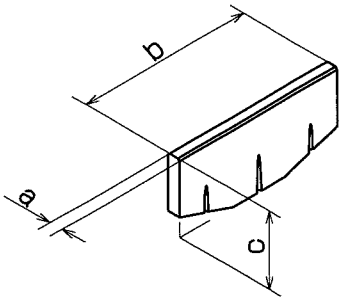

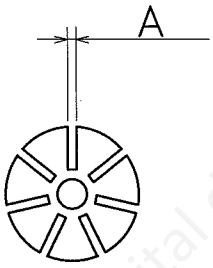

(mm)

	Standard dimension	Service Limit
A	3.5	3.9
a	3.2	2.9
b	60.0	59.5
c	20.0	19.0

(11) Inspection of Coupling

- Are there any cracks, visible indents or deformation on the internal hexagon part?

(12) Inspection of Reduction Gear Part

- Are there any shavings, burrs, marks, or deformation on the engaged parts at each end of Shaft?
- Is any part deformed or cracked?
- Are Bearings damaged or worn?
  Those which do not rotate smoothly (feels rugged when manually rotated) are beyond their service limit.
- Wear limit of Gear on the pitch circle should be within 10 % of the original dimension of tooth thickness.
  However, the limit for the first stage should be 5 %.

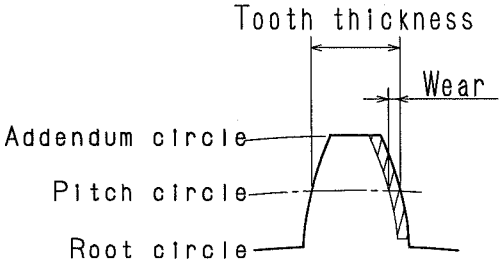

(13) Inspection of Chain Bucket

- Is there excessive wear on fabric Chain bucket?
- Are the mounting bolts loose?
- Is there any dust or foreign matter in Chain bucket?
- Chain bucket should be large enough to contain entire Load chain.

Non-copied digital data copyright http://www.endo-logistics.jp/

(14) Inspection of Trolley

- For details, see "Instruction Manual of Trolley".
- Are the mounting bolts for the I-beam stopper (rail stopper) loose?
- Check the trolley wheels track the rail properly.
  Is the rail excessively worn?
- Are the trolley wheels or the side rollers damaged or worn?
- Check all supporting members are not deformed, cracked or worn.

(15) Inspection of Lifting Slings

- Is the cable kinked, worn or flawed?
- Is the sling chain worn (reduction of diameter) or cracked?
  Is the pitch of the sling chain stretched?
- Is hook, shackle, or ring deformed, cracked or worn?

(16) General Operation Inspection

After completing the inspections described in the foregoing sections, reassemble the whole unit according to Chapter Ⅻ "2. Reassembly" and inspect as follows:

■ Idling

- Check Pull rope or the push button switches can be easily operated and up/down operations are correct as indicated.
- Check hoisting speed can be changed from low to high speed by controlling the pulling force on Pull rope or the pushing force on the push button switches.
- Check Load chain flows freely and smoothly into and out of Chain wheel and there is no noise indicative of binding or other malfunctions.
- Check Upper and Lower limit switches function correctly.
  See Chapter Ⅴ "3. Hoisting and Lowering Limit Switches".
- Check the hoist is not abnormally noisy or vibrating.

■ Rated Load Test

- Check for malfunctions while lifting and lowering.
  Operate the hoist at least twice through the full lifting range.
- Lift the rated load a few inches off the floor and check ability of braking system to stop and hold the load without excessive drift.
- Check Load chain flows freely and smoothly into and out of Chain wheel and there is no audible clicking or other evidence of binding or malfunction.
- Check there is no significant reduction in the hoist performance.
- Check the hoist is not abnormally noisy or vibrating.
- Be alert for unusual visible or audible signs which may indicate a defect.
  Do not operate the hoist until all defects have been determined and corrected.

3. Storing the Hoist

If the hoist is to be stored for a long time, lubricating oil type rust preventive oils (class2), through the air inlet port and run the hoist at low speed for several seconds.
Store the hoist in a dry location.

4. Troubleshooting

⚠ CAUTION: If a malfunction occurs during the operation of the hoist, stop operation immediately and take the necessary steps to rectify the problem. Careless repairs can cause damage to the hoist or personal injury. Therefore, be careful but thorough when making repairs.

The following table shows probable causes and solutions of common malfunctions.

Malfunction	Main Causes	Solution
Motor does not run. Slow rotation or no rotation of Motor.	• Insufficient air pressure.	• Increase air pressure.
	• Supplied air volume is insufficient.	• Increase compressor output.
	• Inner diameter of pipe is too small.	• Replace pipe with a larger inside diameter.
	• Strainer in Adapter at air inlet port is clogged.	• Clean Strainer.
	• Silencer is clogged.	• Replace with new Silencer.
	• Powder or dust in Motor.	• Clean Motor then lubricate. Clean air filter and replace filter element.
	• Vanes have be enlarged due to moisture or long term storage.	• Replace Vanes. Discharge drain water from air filter. Or clean air filter and replace filter element.
	• Vanes are burned due to the dry operation.	• Clean Motor and polish Vanes Replace Vanes if required. Supply oil to lubricator or clean lubricator.
	• Vanes are worn or damaged.	• Replace Vanes.
	• Main valve does not open.	• Tighten connecting bolt on the respective part. Or disassemble and check.
	• Control lever is bent or damaged.	• Replace Control lever.
	• Brake does not release.	• Clean air circuit of the brake. Thereafter, perform leakage test.
	• Reduction gear: Incorrect assembly. Or gears, bearings, etc., are worn or damaged.	• Disassemble and check. Replace the worn or damaged parts.
Brake does not work sufficiently.	• Lining is worn.	• Replace with new Brake disc.
	• Oil on lining.	• Clean. Replace oil seal if required
	• Air exhaust hole on Brake cover is clogged.	• Clean. See Chapter Ⅸ "2.(3) Inspection of Brake and Service Limit".
	• Main valve does not return to the neutral position.	• Check the operation system, e.g., bending of Control lever. Disassemble and check Valve housing if required.

X. Adjustment of Speed and Operating Limit of Control Lever (See Fig. 6)

Control lever(113) has been adjusted before shipping so it touches Motor housing(62), physically stopping Control lever before Main valve reaches the operating limit position. This prevents Main valve from overloading.

■ Re-adjust Control lever for each lifting and lowering direction in the following manner:

> ⚠ **CAUTION: Before readjustment, be sure to shut off the air supply.**

①Loosen Hex. nut(115), and screw Hex. head bolt(114) completely into Control lever(113).

②Loosen Hex. head bolt(114) until it touches Motor housing(62) while Control lever (113) is being pulled down.

③Release Control lever(113), and loosen Hex. head bolt(114) another 1 turns, then lock Hex. head bolt(114) with Hex. nut(115).

■ Adjustment of speed

Lifting and lowering speeds can be reduced, if required, by readjusting the operating limit of Control lever.

To reduce speed, turn Hex. head bolt(114) counterclockwise.

> ⚠ **CAUTION: Be sure to shut off the air supply before turning Hex. head bolt(114). Otherwise, the hoist will move during adjustment, causing danger.**

To recover lifting and lowering speed, adjust Control lever in the same manner, to prevent Main valve from overloading.

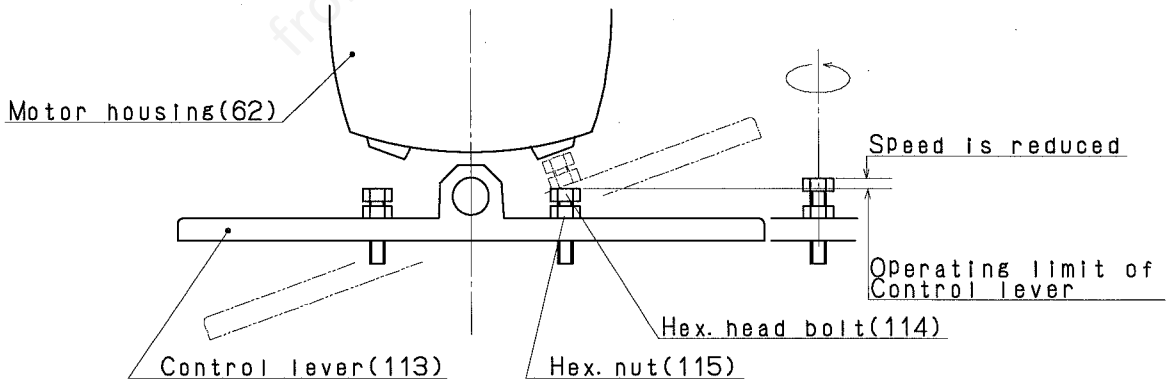

Fig.6

Copied digital data from http://www.kondo-kogyo.co.jp/

XI. Replacement of Load Chain

Chain wear or damage can not be detected by casual observation.

Inspect Load chain according to Chapter IX "2.(2) Inspection of Load Chain and Service Limit".

Always use a manufacturer's genuine replacement chain.

Never use any other chain.

■ For Single Chain Fall Hoist: EHL-1TS

1. Method 1 (See Fig. 7)

-1) Remove old Load chain. See Chapter XII "1. Procedures of Disassembly".

> ⚠ **CAUTION: When removing old Load chain, do not place your hands in an area where they may be injured.**
> **Be sure to shut off the air supply after removing old Load chain.**

-2) Loosen Cap screws(16) sequentially by 1/6 turns, and remove Brake cover(60).
Remove Pressure plate(49), Cylinder cover(52), and Brake piston(55) together from Brake housing(41) to expose Shaft(43).

-3) Pass a steel wire through Chain guide(6), (14).
Attach the end link of new Load chain to the steel wire on the loading side "A".

-4) Pull Load chain into Casing by pulling the steel wire.
The first link must be a standing link 〔link perpendicular to Chain wheel(9)〕.

NOTE: The weld must face away from the center of Chain wheel(9).
Check also the subsequent standing links have the weld facing outwards.

-5) Rotate Shaft(43) by hand to feed Load chain through the hoist.

-6) When the first link comes out, pass it through the middle of Control lever(113), then fix to hoist with Hex. head bolt(127), Plain washer(120), and U-nut (128) without twisting Load chain.

> ⚠ **WARNING:**
> **Make certain there are no twists on the non-loading side of the Load chain between Chain wheel(9) and the end link.**
> **Using the hoist when the Load chain is twisted could result in damage to the hoist or the Load chain breaking, causing personal injury.**

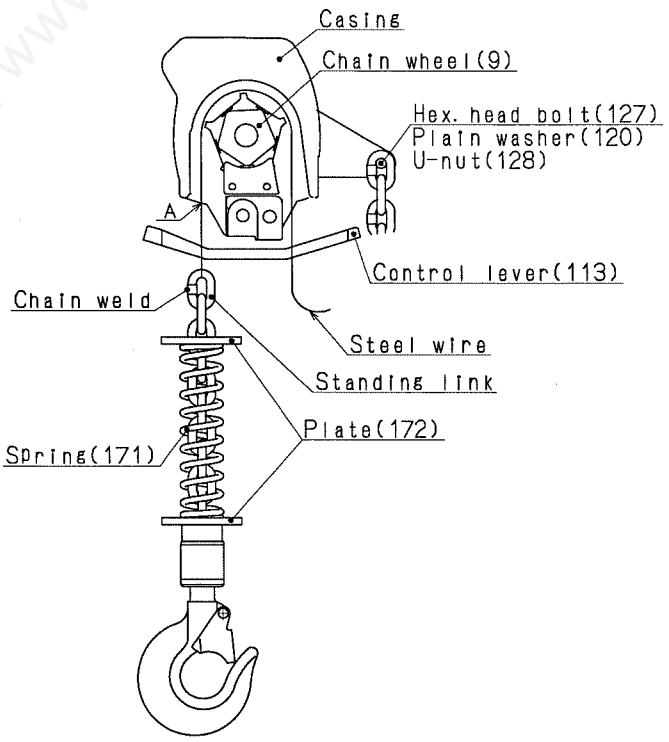

Fig.7

Copied digital data from http://www.endo-kogyo.co.jp/

-7) Insert chain on the loading side through in order of plate (172), spring (171), plate (172) and then Insert end link of Load chain into Hook holder (145), and fix with Pin(149). Then attach Ring(150).

-8) Clean the brake parts and inspect them before reassembling.

-9) Lubricate Load chain according to Chapter Ⅸ **"1. Lubrication".**

-10) Run Load hook (Bottom hook) up and down several times under power with no load to make certain Load chain is running smoothly over Chain wheel.
There must be no apparent binding, abnormal noise or other malfunction.

2. Method 2 (See Fig. 8)

⚠ **WARNING:**	**When replacing the Load chain, do not place your hands in an area where they may be injured.** **Always shut off the air supply before cutting the Load chain, removing or fixing the end link of the Load chain, or loosening or tightening the bolt.**

-1) Disconnect the end link of Load chain from Hook holder(145), and withdraw from Plate(172) and Spring(171).
At this stage, do not remove Load chain from the hoist.

-2) Using an abrasive wheel, etc. , cut a portion of the second link from the end (i.e. the first flat link) as shown in Fig. 8.

NOTE:
Do not distort the link in any manner, otherwise Load chain will not pass over Chain wheel.

-3) Connect new Load chain to old Load chain by hooking the end of new Load chain onto the cutaway link.
The first link of new Load chain must be a standing link 〔link perpendicular to Chain wheel(9)〕.

NOTE:
The weld must face away from the center of Chain wheel(9).
Check also the subsequent standing links have the weld facing outwards.

Slowly operate the hoist in the lifting direction, feeding out old Load chain, leaving new Load chain on the Chain wheel(9).

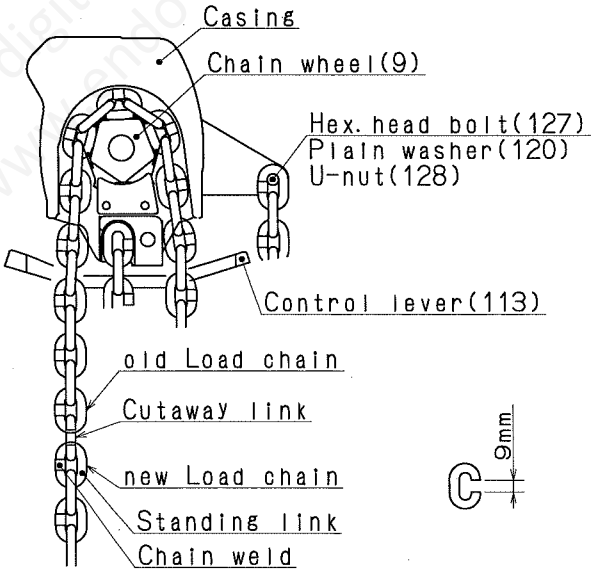

Fig.8

-4)When the end link of new Load chain comes out, pass it through the middle of Control lever(113), then fix to hoist with Hex. head bolt(127), Plain washer(120), and U-nut (128) without twisting Load chain.

Copied digital data from http://www.endo-kogyo.co.jp/

⚠ WARNING: Make certain there are no twists on the non-loading side of the Load chain between Chain wheel(9) and the end link. Using the hoist when the Load chain is twisted could result in damage to the hoist or the Load chain breaking, causing personal injury.

-5) Insert chain on the loading side through in order of plate (172), spring (171), plate (172) and then Insert the end link on the loading side into Hook holder(145), and fix with Pin(149). Then attach Ring(150).

-6) Lubricate Load chain according to Chapter **Ⅸ "1. Lubrication".**

-7) Run Load hook (Bottom hook) up and down several times under power with no load to make certain Load chain is running smoothly over Chain wheel. There must be no apparent binding, abnormal noise or other malfunction.

Copied digital data from http://www.endo-kogyo.co.jp/

■ **For Double Chain Fall Hoist: EHL-2TW**

1.Method 1 (See Fig. 7 & 9)

> ⚠ **WARNING:** **The replacement chain for the double chain fall hoist must have an odd number of links.**

-1)Feed Load chain through Chain wheel(9) in the same manner as steps -1)～-6) of Method 1 for Single Chain Fall Hoist (EHL-1TS), and fix the end link to hoist with . Hex. head bolt(127), Plain washer(120), and U-nut(128).

> ⚠ **WARNING:** **Make certain there are no twists on the non-loading side of the Load chain between Chain wheel(14) and the end link. Using the hoist when the Load chain is twisted could result in damage to the hoist or the Load chain breaking, causing personal injury.**

-2) Insert chain through in order of plate (173), spring (171). Please install plate(173) so that the D side is placed inside of hoist.

-3) Pass a steel wire through Hook case (157), (164). Attach the end link of Load chain on the loading side to the steel wire

-4) Make certain Load chain is straight, then feed Load chain through Hook case(157), (164) by pulling the steel wire from C side.

NOTE:
The first link must be a standing link 〔link perpendicular to Chain wheel (158)〕 . The weld on all standing links must face away from the center of Chain wheel.

-5) Keep Load chain on the loading side straight, fix the end link to position "B" of Casing by using Pin(137) and Split pin(138). Be sure to bend the ends of Split pin(138) after installation.

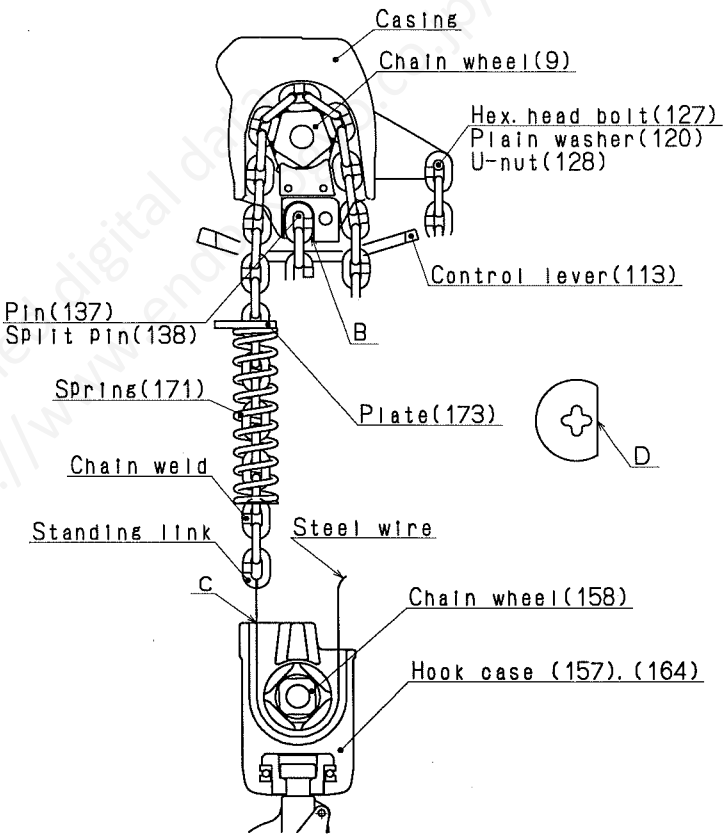

Fig.8

> ⚠ **WARNING:** **Make certain there are no twists on the loading side of the Load chain between the hoist and Hook block (Hook case). Using the hoist when the Load chain is twisted could result in damage to the hoist or the Load chain breaking, causing personal injury.See Chapter Ⅴ "1. Load Chain".**

-6) Clean the brake parts and inspect them before reassembling.
-7) Lubricate Load chain according to Chapter Ⅸ **"1. Lubrication".**
-8) Run Load hook (Bottom hook) up and down several times under power with no load to make certain Load chain is running smoothly over Chain wheel.
There must be no apparent binding, abnormal noise or other malfunction.

2. Method 2 (See Fig. 12)

⚠ **WARNING:**	**The replacement chain for the double chain fall hoist (EHL-2TW) must have an odd number of links.** **When replacing the Load chain, do not place your hands in an area where they may be injured.** **Always shut off the air supply before cutting the Load chain, removing or fixing the end link of the Load chain, or loosening or tightening the bolt.**

-1) Remove Pin(137), disconnect the end link of Load chain from Casing(6), (14), and withdraw Load chain from Hook case(157), (164)(Hook block assembly),Spring(171), Plate(173).
At this stage, do not remove Load chain from the hoist.
-2) Using an abrasive wheel, etc. , cut a portion of the second link from the end (i.e. the first flat link) as shown in Fig. 12.

NOTE:
Do not distort the link in any manner, otherwise Load chain will not pass over Chain wheel.

-3) Connect new Load chain to old Load chain by hooking the end of new Load chain onto the cutaway link.
The first link of new Load chain must be a standing link 〔link perpendicular to Chain wheel(9)〕.

NOTE:
The weld must face away from the center of Chain wheel(9).
Check also the subsequent standing links have the weld facing outwards.

Slowly operate the hoist in the lifting direction, feeding out old Load chain, leaving new Load chain on the Chain wheel(9).

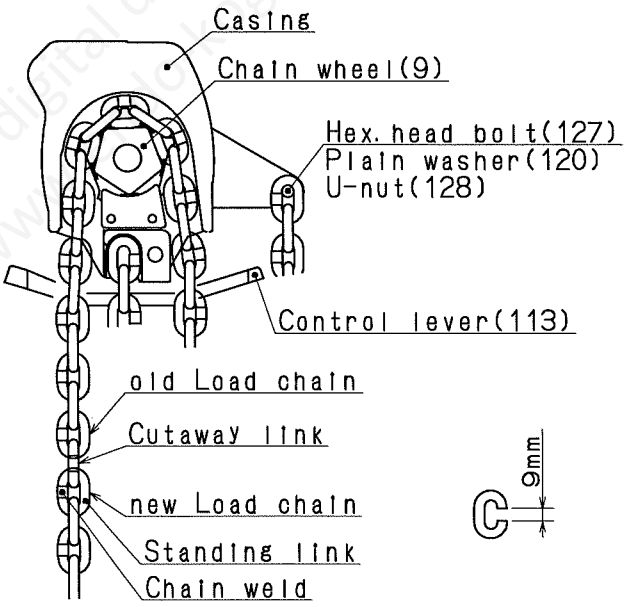

Fig.9

-4) When the end link of new Load chain comes out, pass it through the middle of Control lever(113), then fix to hoist with Hex. head bolt(127), Plain washer(120), and U-nut (128) without twisting Load chain.

⚠ WARNING: Make certain there are no twists on the non-loading side of the Load chain between Chain wheel(9) and the end link. Using the hoist when the Load chain is twisted could result in damage to the hoist or the Load chain breaking, causing personal injury.

-5) ①Insert chain through in order of plate (173), spring (171).

Please install plate(173) so that the D side is placed inside of hoist.

②Pass a steel wire through Hook case(157), (164).

Attach the end link of Load Chain on the loading side to the steel wire.

③Make certain Load chain is straight, then feed Load chain through Hook case(157) , (164) by pulling the steel wire from C side.

NOTE:

The first link must be a standing link 〔link perpendicular to Chain wheel(158)〕 .

The weld on all standing links must face away from the center of Chain wheel.

④Keep Load chain on the loading side straight, fix the end link to position "B" of Casing by using Pin(137) and Split pin(138).

Be sure to bend the ends of Split pin(138) after installation.

⚠ WARNING: Make certain there are no twists on the loading side of the Load chain between the hoist and Hook block (Hook case). Using the hoist when the Load chain is twisted could result in damage to the hoist or the Load Chain breaking, causing personal injury. See Chapter V "1. Load Chain".

-6) Lubricate Load chain according to Chapter IX **"1. Lubrication".**

-7) Run Load hook (Bottom hook) up and down several times under power with no load to make certain Load chain is running smoothly over Chain wheel.

There must be no apparent binding, abnormal noise or other malfunction.

Copied digital data from http://www.endo-kogyo.co.jp/

XII. Disassembly and Reassembly

⚠ CAUTION:

- **Be sure to shut off the air supply before disassembly or reassembly.**
- **Place the hoist on the floor before disassembly or reassembly.**
- **Careless mistakes during maintenance may cause damage to the hoist or personal injury. Therefore, take care during maintenance.**
- **Always employ qualified or well trained personnel for maintenance.**
- Whenever grasping a part in a vice, always use copper-covered vice jaws to protect the surface of the part and help prevent distortion.

1. Procedures of Disassembly

Referring to the disassembly drawings (on Page 37), disassemble the hoist using the following procedure:

-1) Remove the hoist from the supporting member.

⚠ WARNING: **Release the load, shut off the air supply, disconnect the piping, then remove the hoist.**
If this is neglected, serious danger will occur.

-2) Remove Link chain(135),(136) (Load chain).
①Remove Cap screw(127) and disconnect the dead end of Link chain from the hoist.
②Suspend the hoist at about 1.5 m high using a crane, etc., and connect the temporary piping.
Pressure of the air supply should be 0.4～0.6 MPa {4～6 kgf/cm^2} .
③Slowly operate the hoist in the lowering direction and remove Link chain from the hoist.

⚠ CAUTION: **The Link chain drops down at the moment it is disengaged from theChain wheel. So be careful.**

④After shutting off the air supply, disconnect the piping and lower the hoist onto the floor.
-3) Remove Chain bucket(166).
-4) For Double Chain Fall Hoist: EHL-2TW
Remove Pin(137) and Link chain.
-5) If the hoist has a Pendant control switch, remove the whole Pendant control device.
Remove the cover of the cylinder holder, then remove the cap screws.
-6) Remove Button head cap screw(121).
Stand the hoist with Brake cover(60) facing downwards and valve housing(83) upwards.
Support Hook(1) to prevent the hoist from falling down, eg., by jack.
-7) Remove Cover(118), then remove Cap screws(47), (117) from shaft(110).
Withdraw shaft(110) towards valve housing(83) side.
-8) Loosen Cap screws(108),(109) sequentially by 1/6 turns, and remove Valve housing(83).

NOTE: Do not loosen Cap screws(108),(109) on Valve housing(83) until Cap screw(47) has been removed.

-9) Valve housing unit(83～107)

①Remove Retaining ring(100) and Lever(97).

②Remove Retaining ring(103) and Valve cone(89).

NOTE: Do not remove Liner(88) except when O-ring(91),(92), or Liner(88) itself is required to be replaced.
Plug(85) and Set screw(86), (87) are sealed with sealant. Do not disassemble them unless it is required. If they are disassembled, replace Ball(84) and Plug(85) with new one.

③When disassembling the shuttle valve〔Ball(84) and Plug(85)〕:
First remove Lever(97) and Liner(88), and screw the bolt (M4 p=0.7) into Plug(85).
Next, heat Set screw(86) and Plug(85) to about 200℃ using a burner, etc., and remove Set screw(86), then withdraw plug (85) by pulling the bolt before they become cool.

-10) Screw Cap screws(108) into the tap hole of End plate(77), and remove Air motor.
Remove Coned disc spring(71).

-11) Air motor unit(72～80)

①Keep Air motor vertical using a vice, by grasping its connecting section to the Coupling(61).

②Remove Countersunk head cap screw(80) and remove End plate(77).

NOTE: Countersunk head cap screw(80) is fixed with adhesive. If it is tight, do not apply excessive force. In this case, heat Countersunk head cap screw to about 200℃ using a burner, etc., then remove before it becomes cool.

③Remove Cylinder(75) and Vanes(76).

④Take off Rotor(74) from the vice.
Place Rotor(74) with End plate(72) facing downwards as shown in Fig. 10 and check Rotor rotates smoothly.
If smoothly rotating, do not remove Rotor (74) from End plate(72).

NOTE:
End plate(72) and Rotor(74) are adjusted to a suitable clearance by means of Ball bearing(73) in End plate.
Do not disassemble Rotor(74) unless it is required.
Each part is fitted using an interference fit.

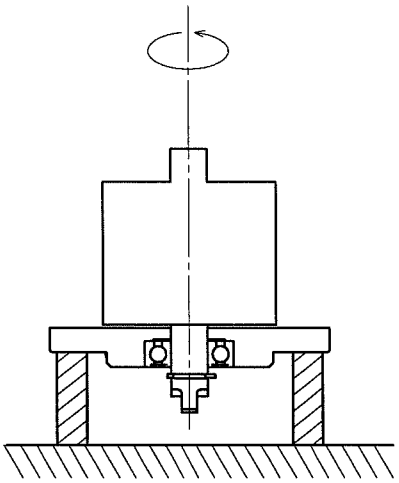

Fig.10

⑤If disassembly is required, remove Rotor(74) from Ball bearing(73) in End plate(72) by using a jig and hand press.

Copied digital data from http://www.endo-kogyo.co.jp/

-12) Loosen Hex. head bolt(67) sequentially 1/6 turns, remove Motor housing(62).
-13) Withdraw Pipe(81) towards Valve housing(83) side.
Remove Coupling(61).
-14) Turn the hoist upside down so the mounting side of Motor housing(62) is facing downwards and Brake cover(60) is facing upwards, and place them on a block(jig) to prevent Shaft(43) from thrusting up.
At this point, be careful not to separate Casing(6), (14) from Gear housing(32).
The thickness of the block is required to be about 20 mm.
-15) Brake unit(48～60)
①Loosen Cap screws(16) sequentially by 1/6 turns, remove Brake cover(60).
②Remove Bolt(58), Brake piston(55) and Cylinder cover(52).
③Remove Pressure plate(49) and Brake disc(48).

NOTE: Check grease from the reduction gear has not leaked through Oil seal(42) when removing Brake disc(48) from Brake housing(41).

-16) Loosen Cap screws(47) sequentially by 1/6 turns, remove Brake housing(41) and Shaft(43) together.
-17) Remove Retaining ring(46), and Shaft(43) and Ball bearing(44) together from Brake housing(41).
-18) Remove Coned disc spring(39), Ball bearing(31), Gear wheels(37), Planet shaft(36), Internal Gear(35), Coned disc springs(34) and Gear Wheel(24).
-19) Lift up Gear housing(32) and remove.

NOTE: Lock screw(33) is sealed with sealant.
Do not remove unless a problem is found such as damage on Gear housing(32) or Lock screw itself

-20) Remove Ball bearing(31), Internal gear(30) and Planet shaft(25).
Remove Pins(28) and Gear wheels(26) from planet shaft(25).
-21) Remove Gear wheel(24), Internal gear(22) and Planet shaft(17).
Remove Pins(21) and Gear wheels(19) from planet shaft(17).
-22) Remove Cap screw(16).
Separate Casing(6) and Casing(14), and remove Hook(1) and Chain wheel(9).

Copied digital data from http://www.ento-kogyo.co.jp/

2. Reassembly

NOTE

- **Before reassembly, thoroughly clean all disassembled parts and check for cracks, flaws, deformation and wear.**
- **Never use acidic solvents for cleaning.**
- **Replace any damaged or excessively worn parts.**
  Also replace burred or damaged screws.
- Never use solvents to clean rubber parts, such as O-rings, X-rings, Oil seals, etc., or plastic parts.
- Do not clean shielded Ball bearings(8), (11), (44), (160).
  If they are contaminated with foreign matter, replace them.
- Always replace the split pin with a new one at reassembly.
- Whenever grasping a part in a vice, always use copper-covered vice jaws to protect the surface of the part and help prevent distortion.
- Always press on the inner ring of a ball-type bearing when installing the bearing on a shaft.
- Always press on the outer ring of a ball-type bearing when pressing the bearing into a bearing recess.
- Always press against the stamped end of a needle-type bearing when pressing the bearing into a bearing recess.

Referring to the disassembly drawing (on Page 37), reassemble the hoist using the following procedure:

-1) Assembling direction for Retaining ring (See Fig. 11)
Set up Retaining ring so the non-chamfered face bears the load.

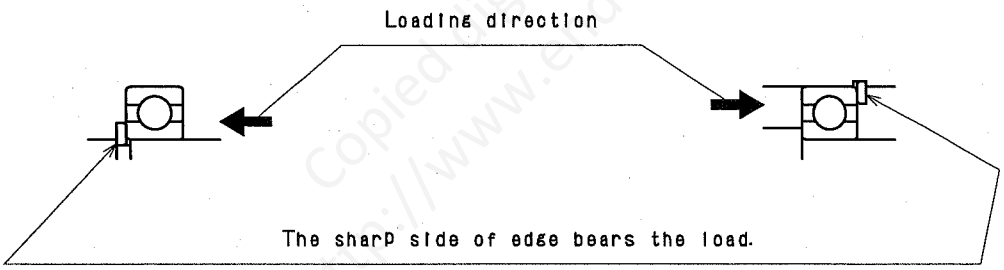

Fig.11

-2) Hook unit(1~5), (141~144)
①Degrease the internal threads of pin(4) and Screws(5) using solvent.
②Attach Hook latch(2), Spring(3) and Pin(4) on Hook(1).
Apply adhesive to the internal threads of Pin(4) and tighten Screws(5).
Use Loctite 262 or equivalents as adhesive.
③Attach Hook latch (142), Spring(143) and Rivet(144), and rivet the end of Rivet(144).

-3) Casing unit(6~16)
①Install Ball bearing(11) and Oil seal(10) into Chain wheel(9).
②Install Spring pin(13) into Chain guide(12) so both ends of Spring pin protrude the same amount from each face of Chain guide.
③Press Ball bearing(8)into casing(6) using a hand press.
Using the inner ring of Ball bearing(8) in Casing(6) for support, press Chain wheel(9) into Ball bearing using a hand press.
Install Chain guide(12) on Casing(6) using the space of Chain wheel pocket.

Copied digital data from http://www.eido-kogyo.co.jp/

④Install Hook(1), and place Casing(14) on Casing(6).
Using the outer ring of Ball bearing(8) in casing(6) for support, press ball bearing(8) into Casing(14) using a hand press.

⑤Tighten Cap screw(16) with a torque of 13.7~15.2N·m {1.40~1.55 kgf·m}.

-4) Set up Casing so Casing(14) is facing down wards and Casing(6) is facing upwards.
Install Pins(7) unto Casing(6).

-5) Place Casing(6),(14) on a block (jig) to prevent Shaft(43) from touching the workbench during its installation.
The thickness of the block is required to be about 20mm.

-6) Reduction gear unit

①For lubrication volume and types of grease, see Chapter Ⅸ"1.Lubrication".

②Lubricate Needle bearings(20), (27), (38) and Ball bearings(29), (31) with grease individually when assembling.

③Press Bushing(18) and install Gear wheels(19) to Planet shaft(17), install them into Casing(6).

④Install Internal gear(22) and O-ring(23), and lubricate the gear portion with grease.

⑤Press Bushing(18) and install Gear wheel(24), then install them into Planet shaft(17).

⑥Fix Gear wheels(26) and Ball bearing(29) to Planet shaft(25), and install them onto Planet shaft(17).

⑦Install Internal gear(30), and lubricate the gear portion with grease.
Install Ball bearing(31).

⑧Degrease Lock screw(33) and its setting Position on gear housing(32) using solvent.
Apply sealant to the bearing surface of Lock Screw(33) and tighten it with a torque of 20~25N·m {2.0~2.5kgf·m}. (seeFig12)
Use Locktite510 or equivalents as sealant.

⑨Attach Gear housing(32)from above.

⑩Install Internal gear(35), Gear wheel(24), Coned disc springs(34), Planet shaft(36), Gear wheels(37), and Ball bearing(31) in this order.

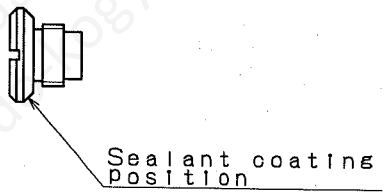

Fig.12

See Fig.13 for the setting direction of Coned disc springs(34) and Gear wheels(37).

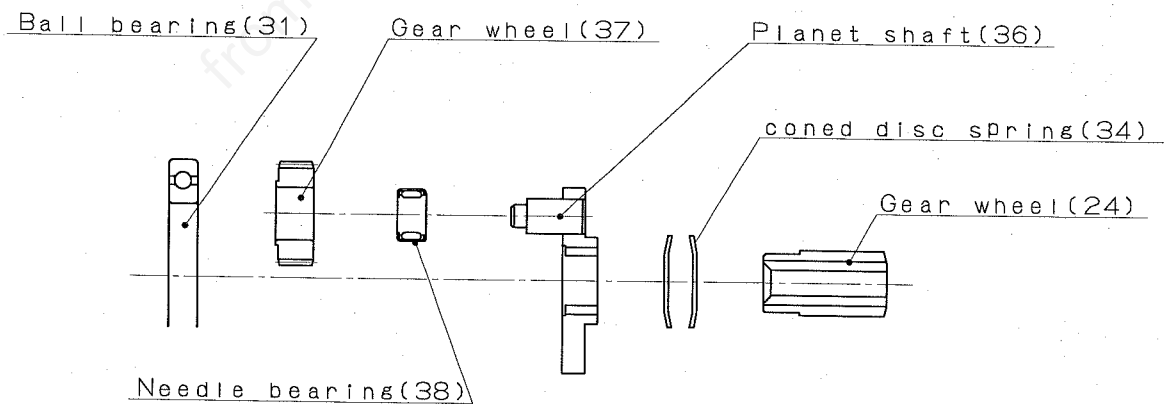

Fig.13

⑪Lubricate with grease, and install Coned disc spring(39).

⑫After installing Shaft(43) in Brake housing(41), they should be installed together in Gear housing(32).

-7) Install Oil seal(42) into Brake housing(41).

-8) Install Ball bearing(44) and Retaining ring(45) onto Shaft(43), then install them in Brake housing(41).
At this point, be careful not to damage Oil seal(42).
Install Retaining ring(46) in Brake housing(41).

-9) Install O-ring(40) into Gear housing(32).
Install O-ring(23) onto Brake housing(41), and install them into Gear housing(32).
Tighten Cap screws(47) sequentially by 1/6 turns.

-10) Brake unit(48～60)

①When assembling, apply " Molykote (R) 33M " to the sliding surfaces and engaged parts of each part.
For coating positions, see Chapter Ⅸ "2.(3) Inspection of Brake and Service Limit".
For details on grease, see Chapter Ⅸ "1. Lubrication".

②Be careful grease, etc., does not adhere to the Brake disc(48) lining.

③Install X-rings(53) and (56) to Cylinder cover(52) and Brake piston(55) respectively.

④Install Pressure plate(49), Keys(50), Springs(51) and Cylinder cover(52) in Brake housing(41).
Fix Brake piston(55) onto Pressure plate(49) by tightening Bolt(58) with a torque of 90～100 N·m {9.2～10.2 kgf·m} .

⑤Remove Pressure plate(49) and Brake piston(55) together from Brake housing (41).

⑥Insert Brake piston(55) into Brake cover(60).
At this point, be careful not to damage X-ring(56).

⑦Install Brake disc(48), O-ring(54), Gasket(59), and Pressure plate(49) and Brake cover(60) together into Brake housing(41).
Tighten Cap screws(16) sequentially by 1/6 turns.

-11) Turn the hoist upside down so Brake cover(60) is facing downwards and the mounting side of Motor housing(62) is facing upwards.
At this point, be careful not to separate Casing(6), (14) from Gear housing(32).
Support Hook(1) to prevent the hoist from falling down, e.g., by jack.
Install Coupling(61).

-12) Install Needle bearing(63), Silencer(64), Support(65) and Retaining ring(66) into Motor housing(62).

-13) Fix Motor housing(62) to Casing(6), (14) with Hex. head bolt(67), Plain washer(68), CD-washer(69) and Hex. nut(70).
Tighten Hex. head bolt(67) with a torque of 61~66 N·m {6.2~6.7 kgf·m}

-14) Air motor unit(72~80)

①Press Ball bearing(73) into the bearing recess on each End plate(72),(77) using a jig and hand press (See Fig. 14).

NOTE: End plates are fitted to Ball bearing using an interference fit.
Replace End plate if the interface between End plate and Ball bearing is loose (no interference).

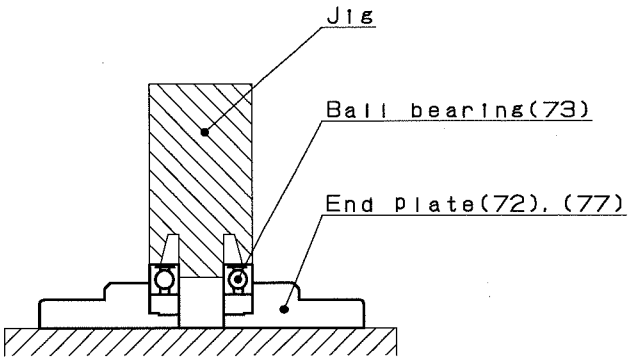

Fig.14

Copied digital data from http://www.endo-kogyo.co.jp/

②Using the inner ring of Ball bearing(73) in End plate(72) for support, press Rotor(74) into Ball bearing using a jig and hand press.

Adjust the clearance between End plate(72) and Rotor(74) to 0.02～0.03 mm with End plate facing downwards while subjected to the mass of Rotor. (See Fig. 15)

If Rotor(74) is not assembled properly, Rotor end will not be parallel to End plate(72), hence the clearance will be unsymmetrical.

So be careful when assembling.

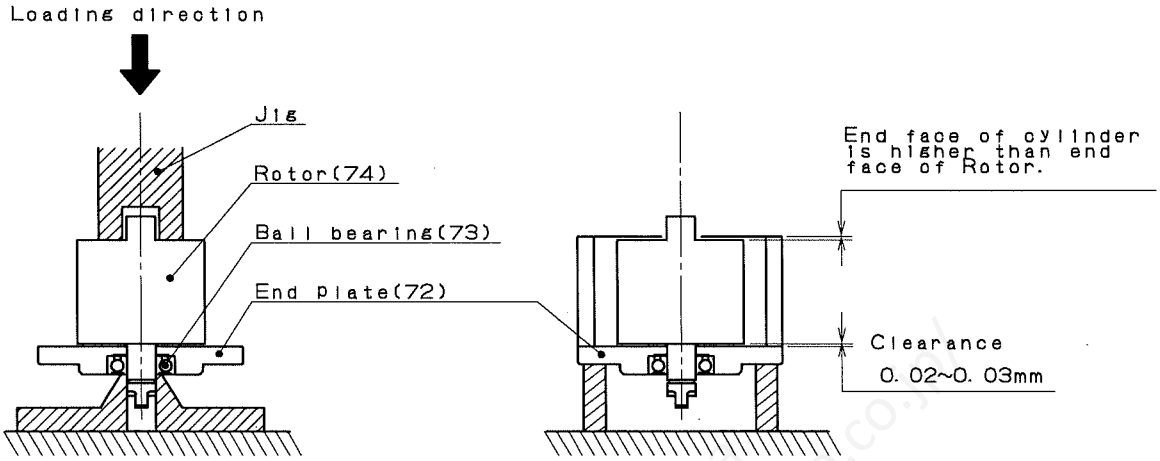

Fig.23

③Degrease the internal thread of Rotor(74), Washer(79), Countersunk head cap screw(80), using solvent.

④Install Cylinder(75), making certain the end face of Rotor(74) does not protrude from the end face of Cylinder(75). (See Fig. 15)

⑤Install Vane(76) into each vane slot on Rotor(74), and slightly lubricating the vane portion.
Next, apply oil thinly on the end face of Rotor(74) and the outer face of the φ12 shaft 〔End plate(77) side〕.
(Use the same oil used in the lubricator.)

⑥Install Spring pin(78) into End plate(77) so both ends of Spring pin protrude the same amount from each face of End plate.

⑦Install End plate(77). Apply adhesive to the internal thread of Rotor(74) and tighten Washer(79) with Countersunk head cap screw(80).
Use Loctite 222 or equivalents as adhesive.

-15) Install Coned disc spring(71), and Air motor into Motor housing(62).

-16) Insert Pipe(81) into Motor housing(62), and install O-ring(40) onto Pipe(81).

-17) Valve housing unit(83～107)

①Treat Liner(88) and Valve cone(89) carefully, as even a small flaw will render them useless.

②Degrease Plug(85), Set screws(86), (87), Adapter(107) and their setting positions on Valve housing(83) using solvent.

③Install Ball(84) into Valve housing(83).
Apply sealant to the outer face of Plug(85), and insert Plug(85) into valve housing(83) so the φ4 hole of Plug(85) 〔hole perpendicular to longitudinal direction of plug〕 aligns with Set screw(86) tapping hole on valve housing(83).
Use Loctite (Loctite 510) or equivalents as sealant.

④Install strainer(106) into Adapter(107).

Apply sealant (Loctite 510) to the Adapter(107) surface which contacts with the Valve housing(83) and Set screws(86), (87), then screw into valve housing.

⑤Install Needle bearing(63).

⑥Apply oil to O-rings(91),(92), and place them onto Liner(88).

(Use the same oil used in the lubricator.)

Insert Liner(88) into Valve housing(83) so the oblong hole of Liner aligns with the set hole of Lever(97).

-18) Place Gasket(82) onto Motor housing(62), and install Valve housing(83).

Tighten Cap screws(108), (109) sequentially by 1/6 turns.

-19) Insert Shaft(110) from Valve housing(83) side.

At this point, sequentially install Angle piece(111), washer(112), and Control lever(113).

Tighten Cap screws(47), (117) with a torque of 13.7~15.2 N·m {1.40~1.55 kgf·m}

-20) Adjust the operating limit of Control lever(113).

This adjustment is necessary to prevent the parts of Main valve from overloading.

See Chapter Ⅹ "Adjustment of Speed and Operating Limit of Control Lever".

-21) Bottom hook unit (141～150): EHL-1TS

①Install Hook(141) in Hook holder(145), and insert eight Steel balls(146).

②Install Washer(147) and Sleeve(148).

③Insert the end link of Link chain(135) into Hook holder(145), and fix with Pin(149) and Attach Ring(150).

-22) Hook block unit(155～164): EHL-2TW

①Install Thrust bearing(155) onto Hook ring(156) so the inner ring (ring with small inside diameter) is engaged with Hook ring.

②Install Hex. nut(163) in Hook case (157) or (164) with the chamfered face of outer periphery facing inwards.

③Tighten Cap screws(161) with a torque of 31～35 N·m {3.2～3.5 kgf·m} .

-23) Install Link chain.

See ChapterⅪ "Replacement of Load Chain".

-24) Install Chain bucket(166).

Copied digital data from http://www.endo-kogyo.co.jp/

XIII. Parts List

Remarks When Purchasing Parts

- Specify part No., part name and model name of the hoist
- State SER. NO. (product No.) clearly if attached.
- Parts without part Nos. can not be supplied individually.
  Please purchase a set or complete unit.

■ How to read parts list

Ref. No.	Part No.	Quantity EHL-1TS	Quantity EHL-2TW	Description
-	LHP000265	1	1	Hook compl.
1	-	1	1	-Hook
-	LHP000266	1	1	-Hook latch set
2	-	1	1	--Hook latch
3	-	1	1	--Spring
4	-	1	1	--Pin
5	-	2	2	--Screw
-	LHP000267	1	1	Casing set
6	-	1	1	-Casing
14	-	1	1	-Casing
7	P2H400040	4	4	Pin
8	KA60103104	2	2	Ball bearing
-	LHP000286	1	1	Chain wheel set

The mark indicates the range of the set or the complete unit

Copied digital data from http://www.endo-kogyo.co.jp/

■PARTS LIST EHL-1TS,EHL-2TW AIR HOIST

Ref. No.	Part No.	Quantity EHL-1TS	Quantity EHL-2TW	Description
-	LHP000265	1	1	Hook compl.
1	-	1	1	-Hook
-	LHP000266	1	1	-Hook latch set
2	-	1	1	--Hook latch
3	-	1	1	--Spring
4	-	1	1	--Pin
5	-	2	2	--Screw
-	LHP000267	1	1	Casing set
6	-	1	1	-Casing
14	-	1	1	-Casing
7	P2H400040	4	4	Pin
8	KA60103104	2	2	Ball bearing
-	LHP000286	1	1	Chain wheel set
9	-	1	1	-Chain wheel
● 10	P2H400046	1	1	-Oil seal
● 11	KA60103014	1	1	Ball bearing
12	P2H300268	1	1	Chain guide
13	KA42410622	2	2	Spring pin
15	KA32410621	7	7	CD-washer
16	KA00910635	5	5	Cap screw
17	P2h200110	1	1	Planet shaft
18	P2H400594	2	2	Bushing
-	LHP000268	1	1	Gear wheel set
19	-	3	3	-Gear wheel
● 20	P2H400595	3	3	-Needle bearing
21	P2H400596	3	3	Pin
22	P2H200111	1	1	Internal gear
● 23	KA50201000	2	2	O-ring
24	P2H300335	2	2	Gear wheel
25	P2H200112	1	1	Planet shaft
-	LHP000269	1	1	Gear wheel set
26	-	3	3	-Gear wheel
● 27	P2H400597	3	3	-Needle bearing
28	P2H400598	3	3	Pin
29	KA60107080	1	1	Ball bearing
30	P2H200113	1	1	Internal gear
31	KA60107110	2	2	Ball bearing
32	P2H100028	1	1	Gear housing
33	P2H400359	1	1	Lock screw
34	P2H300337	2	2	Coned disc spring
35	P2H200114	1	1	Internal gear
36	LHP000270	1	1	Planet shaft
-	LHP000271	1	1	Gear wheel set
37	-	3	3	-Gear wheel
● 38	P2H400139	3	3	-Needle bearing
39	P2H300339	1	1	Coned disc spring
● 40	KA50100060	2	2	O-ring
41	P2H100029	1	1	Brake housing
● 42	P2H400514	1	1	Oil seal
43	P2H200115	1	1	Shaft
● 44	KA60103022	1	1	Ball bearing
● 45	KA40110015	1	1	Retaining ring

Ref. No.	Part No.	Quantity EHL-1TS	Quantity EHL-2TW	Description
46	KA40210032	1	1	Retaining ring
47	KA00910620	5	5	Cap screw
● 48	LHP000085	1	1	Brake disc
49	P2H300191	1	1	Pressure plate
50	P2H400394	2	2	Key
● -	LHP000086	1	1	Spring set
51	-	8	8	-Spring
52	P2H300192	1	1	Cylinder cover
● 53	P2H400324	1	1	X-ring
● 54	KA50200800	1	1	O-ring
55	P2H300193	1	1	Brake piston
● 56	P2H400325	1	1	X-ring
57	KA32411421	1	1	CD-washer
58	P2H400395	1	1	Bolt
● 59	P2H300340	1	1	Gasket
60	P2H200096	1	1	Brake cover
61	P2H400599	1	1	Coupling
62	P2H100030	1	1	Motor housing
63	P2H400099	1	1	Needle bearing
64	P2H400600	2	2	Silencer
65	P2H400601	2	2	Support
66	KA40210020	2	2	Retaining ring
67	P2H400090	3	3	Hex. head bolt
68	KA30211000	6	6	Plain washer
69	KA32411021	3	3	CD-washer
70	KA20161000	3	3	Hex. nut
71	P2H300263	1	1	Coned disc spring
-	LHP000272	1	1	Air motor compl.
-	LHP000273	1	1	-End plate set
72	-	1	1	--End plate
73	KA60104011	1	1	--Ball bearing
74	P2H200116	1	1	-Rotor
75	P2H200117	1	1	-Cylinder
● -	LHP000274	1	1	-Vane set
76	-	7	7	--Vane
-	LHP000275	1	1	-End plate set
77	-	1	1	--End plate
73	KA60104011	1	1	--Ball bearing
78	KA42410316	1	1	--Spring pin
79	P2H400542	1	1	-Washer
80	KA01310512	1	1	-Countersunk head cap screw
81	P2H400603	1	1	Pipe
● 82	P2H300342	1	1	Gasket
-	LHP000276	1	1	Valve housing assembly
83	P2H100031	1	1	-Valve housing
63	P2H400099	1	1	-Needle bearing
84	P2H400032	1	1	-Ball
85	P2H400604	1	1	-Plug
86	KA16310508	2	2	-Set screw
87	KA16110506	1	1	-Set screw
-	LHP000277	1	1	-Valve set
88	-	1	1	--Liner

We recommend that you stock parts indicated by a bullet(●).
Parts without part numbers can not be supplied separately.
When ordering spare parts, specify part number (not the reference number), description and model of the hoist.

Prohibited copied digital data http://www.kanto-kogyo.co.jp/

	Ref. No.	Part No.	Quantity EHL-1TS	Quantity EHL-2TW	Description
	89	-	1	1	--Valve cone
	90	P2H400245	1	1	--Spring
●	91	KA50200300	3	3	--O-ring
●	92	KA50100280	1	1	--O-ring
	93	P2H400246	2	2	--Spring
	94	P2H400250	2	2	--Spacer
	95	P2H400255	2	2	--Sleeve
	96	KA01310630	2	2	--Countersunk head cap screw
	97	LHP000122	1	1	-Lever
●	98	KA50100120	1	1	-O-ring
●	99	KA50200220	1	1	-O-ring
	100	KA40210024	1	1	-Retaining ring
●	101	KA50200420	1	1	-O-ring
	102	P2H400231	1	1	-Cover
	103	KA40210045	1	1	-Retaining ring
	104	P2H400214	2	2	-Seal
	105	KA10120510	1	1	-Machine screw
	106	LHP000264	1	1	-Strainer
	107	P2H400391	1	1	-Adapter
	108	P2H400112	2	2	Cap screw
	109	KA00910630	2	2	Cap screw
	110	P2H300344	1	1	Shaft
	111	P2H300194	1	1	Angle piece
	112	P2H400400	2	2	Washer
	113	P2H100032	1	1	Control lever
	114	P2H400882	2	2	Hex. head bolt
	115	KA20110600	2	2	Hex. nut
	116	P2H400402	2	2	S-hook
	117	KA00910625	1	1	Cap screw
	118	P2H300345	1	1	Cover
	119	KA00910816	2	2	Cap screw
	120	KA30210800	4	4	Plain washer
	121	KA01710812	1	1	Button head cap screw
	-	LHP000288	1	1	Pull rope compl.
	122	P2H400403	2	2	-Control chain
	123	P2H300273	1	1	-Caution plate
	124	LHP000101	1	1	-Handle set
	125	P2H400406	1	1	-Handle
	126	KA14124125	2	2	-Screw
	127	KA00160848	1	1	Hex. head bolt
	128	KA25520802	1	1	U-nut
	129	P2H300284	1	-	Name plate
	130	P2H300285	-	1	Name plate
	131	KA14549803	4	4	Drive screw

LINK CHAIN

●	135	P2H300291	1	-	Link chain
●	136	P2H300292	-	1	Link chain
	137	P2H300346	-	1	Pin
	138	KA42120320	-	2	Split pin

SPRING SET

	Ref. No.	Part No.	Quantity EHL-1TS	Quantity EHL-2TW	Description
	-	LHP002269	1	-	Spring set
	-	LHP002270	-	1	Spring set
	171	P2H402910	1	1	-Spring
	172	P2H402912	2	-	-Plate
	173	P2H402913	-	1	-Plate

EHL-1TS, BOTTOM HOOK

	-	LHP000511	1	-	Hook holder assembly
	-	LHP000212	1	-	-Hook compl.
	141	-	1	-	--Hook
	-	LHP000214	1	-	--Hook latch set
	142	-	1	-	---Hook latch
	143	-	1	-	---Spring
	144	-	1	-	---Rivet
	145	P2H300347	1	-	-Hook holder
	146	KA63100703	8	-	-Steel ball
	147	P2H400544	1	-	-Washer
	148	P2H400861	1	-	-Sleeve
	149	P2H400605	1	-	-Pin
	150	P2H400547	1	-	-Ring
	151	P2H400606	1	-	Stopper

EHL-2TW, HOOK BLOCK

	-	LHP000280	-	1	Hook block assembly
	-	LHP000265	-	1	-Hook compl.
	1	-	-	1	--Hook
	-	LHP000266	-	1	--Hook latch set
	2	-	-	1	---Hook latch
	3	-	-	1	---Spring
	4	-	-	1	---Pin
	5	-	-	2	---Screw
●	155	KA60401090	-	1	-Thrust bearing
	-	LHP000281	-	1	-Hook ring set
	156	-	-	2	--Hook ring half
	-	LHP000282	-	1	-Hook case set
	157	-	-	1	--Hook case half
	164	-	-	1	--Hook case half
	-	LHP000283	-	1	-Chain wheel set
	158	-	-	1	--Chain wheel
	159	-	-	1	--Shaft
	160	KA60104044	-	2	-Ball bearing
	161	KA00980835	-	3	-Cap screw
	162	KA32410821	-	3	-CD-washer
	163	KA20160800	-	3	-Hex.nut

CHAIN BUCKET

	166	LHP000284	1	1	Chain bucket (for 6m chain)
	167	KA00910816	2	2	Cap screw
	162	KA32410821	2	2	CD-washer

We recommend that you stock parts indicated by a bullet(●).
Parts without part numbers can not be supplied separately.
When ordering spare parts, specify part number (not the reference number), description and model of the hoist.

Copied digital data from http://www.endoseiyo.co.jp/

■EHL-1TS
EHL-2TW

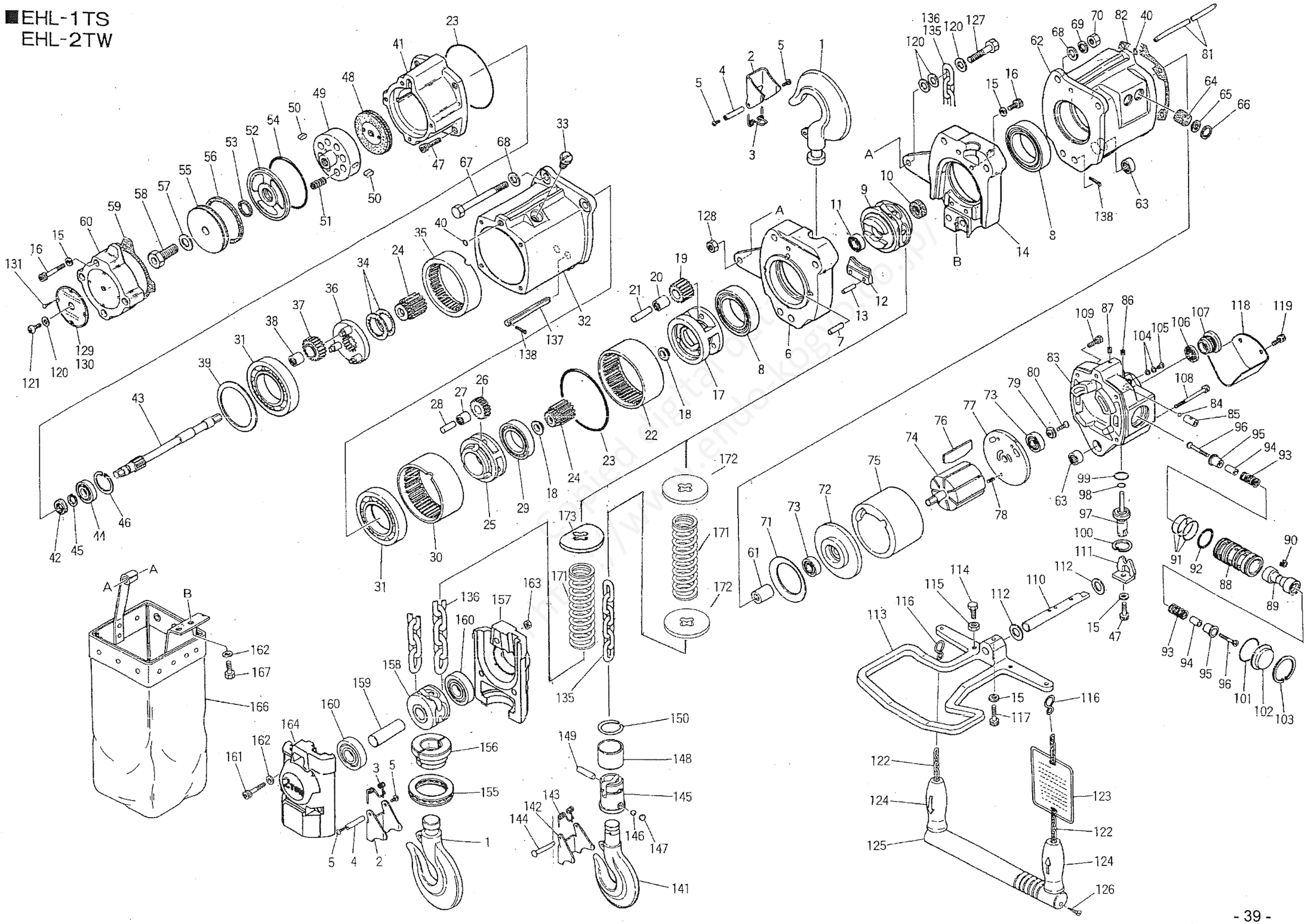

Copied digital data
from http://www.endo-kogyo.co.jp/

ENDO KOGYO CO., LTD.

Head Office & Plant: 3-14-7, Akiba-cho, Tsubame, Niigata, Japan
Tel. 0256-62-5131 Fax. 0256-62-5772

Tokyo Office: JBSL kanda Bldg., 2F, 12-2, Kanda Higashimatushita-cho,
Chiyoda-ku, Tokyo Japan
Tel. 03-5295-3711 Fax. 03-5295-3717

Osaka Office: Daito Bldg., 3F, 3-14, Saiwai-cho 2-chome,
Naniwa-ku, Osaka, Japan
Tel. 06-6568-1571 Fax. 06-6568-1573

Nagoya Office: Park IM Bldg., 3F, 1-7-14, Osu,
Naka-ku, Nagoya, Aichi, Japan
Tel. 052-253-6231 Fax. 052-253-6240

Kyusyu Office: Bunki Bldg., 3F, 11-15, Hakataekihigashi 3-chome,
Hakata-ku, Fukuoka, Japan
Tel. 092-412-5281 Fax. 092-412-5280